NETWORK ANALYZERS

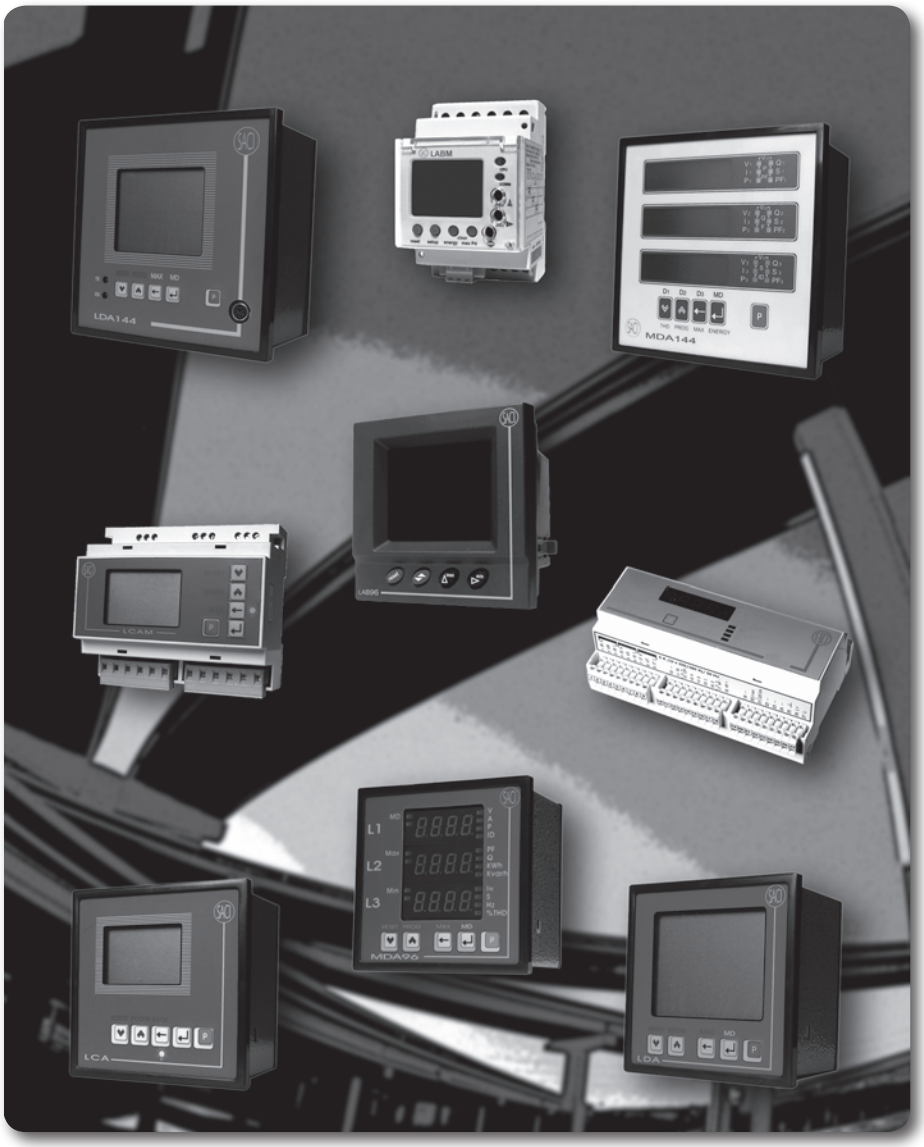

Analyzers

PRODUCTS RANGE

NETWORK ANALYZERS - ALTERNATING CURRENT

LCD DISPLAY

DIN RAIL MOUNTING	LABM, LCAM, LCCM, AR3AC	
PANEL (96 x 96) MOUNTING	LCC, LCA, LDA, LAB 96, ANG96, SNG96	
PANEL (144 x 144) MOUNTING	LDA 144, LDA 144 (with Memory)	

LED DISPLAY

DIN RAIL MOUNTING	TCEM	
PANEL (96 x 96) MOUNTING	MAR 96, MDA 96	
PANEL (144 x 144) MOUNTING	MAR 144, MDA 144	

NETWORK ANALYZERS - DIRECT CURRENT

LCD DISPLAY

MONTAJE CARRIL DIN	AR3DC	

LED DISPLAY

PANEL (144 x 144) MOUNTING	TMCC	
NETWORK QUALITY ANALYZER (144 x 144)	TMCQ	
RS232 / RS485 CONVERTER	IFR1, IFRA, IFR4, RT485	
MANAGEMENT SOFTWARE	SACIgest, TTIgest	

CONTENTS

NETWORK ANALYZER - ANG96

Programmable instrument with microprocessor and LCD display indicator for measurements and built-in keypad

- **DIN 96 x 96 INSTRUMENT**
- **MEASUREMENT IN 4 QUADRANTS**
- **THREE-PHASE, 3 or 4-WIRE**
- **NEUTRAL CURRENT**
- **HARMONIC DISTORTION (THD V and I)**
- **MAXIMUM DEMAND, A, kW, kVA, kvar**
- **MAX. and MIN. VALUES**
- **TRUE EFFECTIVE VALUE (RMS)**
- **RS485 SERIAL PORTS**
- **2 CONTACTS OUTPUT**

MEASURING ENVIRONMENT

ELECTRICAL PARAMETER	Symbol	L1	L2	L3	SYSTEM
Voltage (Line-to-Neutral)	V	●	●	●	
Voltage (Line-to-Line)	V	●	●	●	
Neutral current	A				●
Current	A	●	●	●	
Active power (P)	kW	●	●	●	●
Reactive power (Q)	kVAr	●	●	●	●
Apparent power (S)	kVA	●	●	●	●
Power factor (cos φ)	PF	●	●	●	●
Maximum demand (Current)	A	●	●	●	
Maximum demand (P)	kW				●
Maximum demand (Q)	kVAr				●
Maximum demand (S)	kVA				●
Frecuency	Hz				●
THD Curent	A	●	●	●	
THD Voltage	V	●	●	●	
Consumed active energy (EP+)	kW-h				●
Generated active energy (EP-)	kW-h				●
Consumed inductive reactive energy (EQC+)	kvar-h				●
Consumed capacitive reactive energy (EQC-)	kvar-h				●

MODEL

- ANG96 Current insulated
Serial output RS485
2 relays

SETTING

- Identification code of the instrument
- VT Ratio.
- CT Ratio.
- Contact operating mode.
- Pulse value.
- Baud rate.

CONTACTS OUTPUTS

Contact outputs can be set as max. or min. alarm contacts associated to any measured parameter or as active energy (EP+) and reactive energy (EQL) pulses. They can also be set as contacts managed from the central unit.

MAXIMUM DEMAND FUNCTION

- Average values of I1, I2, I3, P, Q and S.
- Integration period: 15 or 30 minutes.
- These values can be displayed as instantaneous values or saved as maximums.

CONTACTS OUTPUT

- Type:	RS485
- Protocol	MODBUS RTU
- Baud rate	Programmable 1200 – 19200 bauds Standard 9600 bauds

LCD DISPLAY

- Height of digits: 14mm. (4 parameters per page)
- Built-in keypad (5 keys)
- Over 80 measuring parameters in different pages
- Up to 83 measuring parameters
- Selectable pages with up (↑) and down (↓)
- Back lighting

MAX. AND MIN. VALUES

- Max. and min. values for: V1, V2, V3, V12, V23, V31, I1, I2, I3, P1, P2, P3, P, Q, S, cos φ, and Hz.

TECHNICAL ESPECIFICATIONS

INPUT
3 -Fases 3 wire, balanced or 3-phase wire, unbalanced.

Rated voltage (Un)(Programmable)	110, 230 or 400 V
Burden	1 mA per phase
Operating range	20-120 % Un
Rated voltage(In) (Programmable)	5 A or 1 A
Burden	0,3 VA per phase
Operating range	0- 120 % In
Frecuency	50 or 60 Hz

CONTACTS OUTPUT

Number of outputs	2
Type	N.O. relay 250 V, 3 A

CONTACTS OUTPUT

Type	RS485
Connection	2 wire, half duplex
Baud rate	Programmable
Baud rate (standard)	9600 bauds
Max. Nº. of instruments per line	32
Net maximum length per line	1250 m

AUXILIARY VOLTAGE

- UNIVERSAL Aux. V	85/264 V A.C.; 90/300 V D.C.
Burden	4 VA

GENERAL FEATURES

Case material	ABS, UL94 V0
Dimensions	DIN 96 x 96 mm
Terminals	Pluggable
Max. wire diameter	2,5 mm^2
Weight	0,4 kg
Protection	IP54 (Front) IP20 (Terminals)
Electrical safety (EN 61010)	Class 2 Category III

ACCESSORIES

x/5 A and x/1 A transformers
RS232 / RS485 converters
RS485 amplifiers

OPTIONAL

Reading software (at no additional cost).
Management software SACIgest

ACCURACY

Parameter	Operating range	Accuracy
Voltage	20-120 %	0,3%(read.+ full scale)
Current	1-120%	0,3%(read.+ full scale)
Active power	1-120%	0,3%(read.+ full scale)
Reactive power	1-120%	0,3%(read.+ full scale)
Apparent power	1-120%	0,4%(read.+ full scale)
Power factor	-0,5/+0,5	1%(FE)
Frecuency	45-65 Hz	0,2% (FE)
Active energy	5-120%	0,5% read.
Reactive energy	5-120%	1% read.

CONNECTIONS

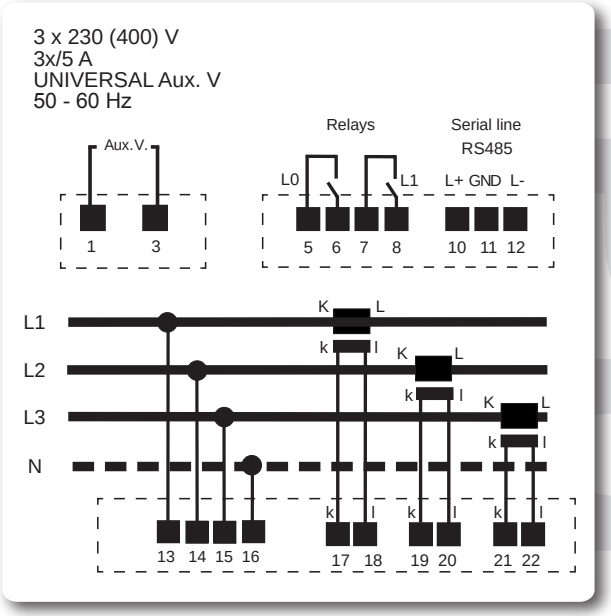

NETWORK ANALYZER - LCC

Instrument with microprocessor, programmable,
LCD display indicating three measurements, and built-in keypad.

- **DIN 96 x 96 INSTRUMENT**
- **MEASUREMENT IN 4 QUADRANTS**
- **BALANCED or UNBALANCED SYSTEMS**
- **NEUTRAL CURRENT**
- **MAXIMUM DEMAND, A, kW, kVA, kvar**
- **MAX.- and MIN.- VALUES**
- **TRUE EFFECTIVE VALUE (RMS)**
- **2 PULSE or ALARM OUTPUTS**
- **SELF SUPPLIED**

MEASURING ENVIRONMENT

ELECTRICAL PARAMETER	Symbol	L1	L2	L3	SYSTEM
Voltage (Line-to-Neutral)	V	●	●	●	
Voltage (Line-to-Line)	V	●	●	●	
Neutral current	A				●
Current	A	●	●	●	●
Active power (P)	kW	●	●	●	●
Reactive power (Q)	kVAr	●	●	●	●
Apparent power (S)	kVA	●	●	●	●
Power factor (cos φ)	PF	●	●	●	●
Maximum demand (Current)	A	●	●	●	
Maximum demand (P)	kW				●
Maximum demand (Q)	kVAr				●
Maximum demand (S)	kVA				●
Frecuency	Hz				●
Consumed active energy (EP+)	kW-h				●
Generated active energy (EP-)	kW-h				●
Consumed inductive reactive energy (EQC+)	kvar-h				●
Consumed capacitive reactive energy (EQC-)	kvar-h				●

MODEL

- **LCC-BA** Basic model
  Current insulated

SETTING

- Instrument identity code.
- VT Ratio.
- CT Ratio.
- 2 outputs operating mode.
- Balanced or unbalanced system.

PULSE - ALARM OUTPUTS

Type: voltage free contacts.
The pulse - alarm outputs can be set as max. or min. alarm contacts associated to any measured parameter, or as active energy pulses (EP+) and reactive energy pulses (EQL).

LCD DISPLAY

- LCD display with built-in keypad.
- Height of digits: 14 mm (3 parameters per page).
- Over 30 measuring parameters in different pages.
- Pages selectable with up(↑) and down(↓) Keys.-
- Back lighting.

MAX.- AND MIN.- VALUES

- Max. values of: V1, V2, V3, V12, V23, V31, I1, I2, I3, IN , P, Q and S.
- Min. values of: V1, V2, V3, V12, V23, V31.

MAXIMUND DEMAND

- Average values of I1, I2, I3, IN, P, Q and S.
- Integration Period: 5, 10, 30, 60, 300, 480, 600 or 900 s.
- these values can be displayed as current average values and saved as maximums.

TECHNICAL ESPECIFICATIONS

INPUT

3-phase, 3 wire, balanced or 3-phase, 4 wire, unbalanced.

Rated voltage (Un)	400 V
Burden	20 mA per phase
Operating range	80-120 % Un
Rated current (In)	1 or 5 A
Burden	0,2 VA per phase
Operating range	1- 120 % In
Frecuency	50-60 Hz

CONTACTS OUTPUT

Number of outputs	2
Type	N.O. Optocoupler
	< 48V D.C.(24V D.C. 1 kΩ)
Pulse weight (Energy)	1 or 0,1 imp./kWh
Pulse length	100 ms

ACCURACY

Parameter	Operating range	Accuracy
Voltage	80-120 %	0,3%(read.+ full scale)
Current	1-120%	0,3%(read.+ full scale)
Active power	1-120%	0,3%(read.+ full scale)
Reactive power	1-120%	0,3%(read.+ full scale)
Apparent power	1-120%	0,5%(read.+ full scale)
Power factor	-0,5/+0,5	0,6%(read.)
Frecuency	45-65 Hz	0,2% (rated freq.)
Active energy	5-120%	1% read.
Reactive energy	5-120%	2% read.

GENERAL FEATURES

Display lighting	Back
Case material	ABS, UL94 V0
Dimensions	DIN 96 x 96 x 49 mm
Connections	Pluggable
Max. wire diameter	2,5 mm²
Weight	0,30 kg
Protection	IP40 (Front)
	IP20 (Terminals)
Electrical safety (EN 61010)	Class 2
	Category III

ACCESSORIES

x/5 A or x/1 A transformers

CONNECTIONS

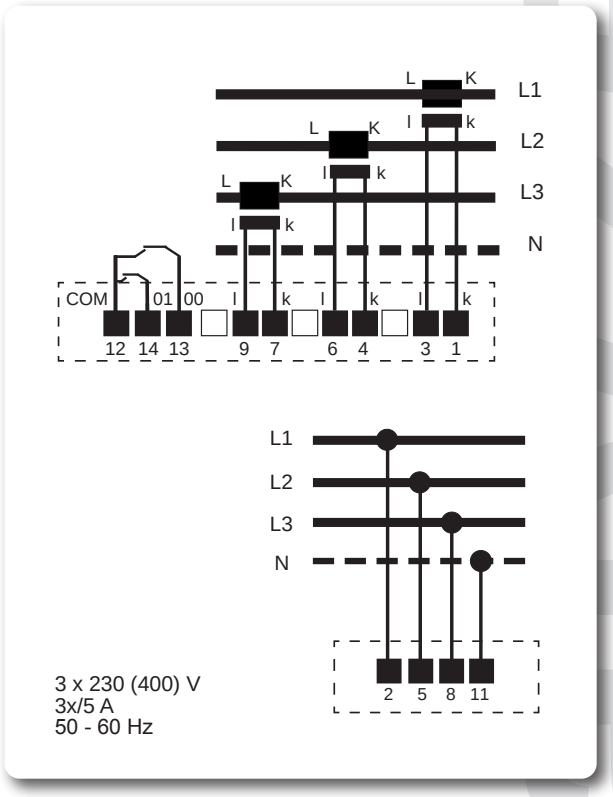

NETWORK ANALYZER - LCA

Instrument with microprocessor, programmable, LCD display indicating three measurements, and built-in keypad.

- **DIN 96 x 96 INSTRUMENT**
- **MEASUREMENT IN 4 QUADRANTS**
- **THREE-PHASE, 4-WIRE**
- **HARMONIC DISTORTION (THD V and I)**
- **MAX.- and MIN.- VALUES**
- **TRUE EFFECTIVE VALUE (RMS)**
- **RS232 / RS485 SERIAL PORT**
- **2 CONTACTS OUTPUT**

MEASURING ENVIRONMENT

ELECTRICAL PARAMETER	Symbol	L1	L2	L3	SYSTEM
Voltage (Line-to-Neutral)	V	(*)	(*)	(*)	
Voltage (Line-to-Line)	V	●	●	●	
Current	A	●	●	●	
Active power (P)	kW	●	●	●	●
Reactive power (Q)	kVAr	●	●	●	●
Apparent power (S)	kVA	●	●	●	●
Power factor (cos φ)	PF	●	●	●	●
Frecuency	Hz				●
THD Current	A	●	●	●	
THD Voltage	V	●	●	●	
Consumed active energy (EP+)	kW-h				●
Generated active energy (EP-)	kW-h				●
Consumed inductive reactive energy (EQC+)	kvar-h				●
Consumed capacitive reactive energy (EQC-)	kvar-h				●

(*) Via serial port only

MODEL

- **LCA-BA** Basic model
  Current insulated
- **LCA-C** Basic model
  Current insulated
  RS485 Serial port
  2 relays

SETTING

- Instrument identity code.
- VT Ratio.
- CT Ratio.
- Contact operating mode.

SERIAL PORT (Model LCA-C)

- Type:	RS485
- Protocol	MODBUS RTU
- Baud rate	Programmable 300 – 19200

CONTACTS OUTPUT (Model LCA-C)

Type: Voltage free contacts (Relays).
CONTACTS OUTPUT can be set as max or min alarm contacts associated to any measured parameter, or as active energy (EP+) and reactive energy (EQL) pulses. They also can be set as contacts operated from the central unit.

LCD DISPLAY

- LCD display with built-in keypad.
- Over 30 measuring parameters in different pages.
- Pages selectable with up(↑) and down(↓) Keys.-

MAX.- AND MIN.- VALUES

- Max. and min. values of: V_1, V_2, V_3,V_{12}, V_{23}, V_{31}, I_1, I_2, I_3, P_1, P_2, P_3, P, Q, S, cos φ, and Hz.
  Q and S.

TECHNICAL ESPECIFICATIONS

INPUT

3-phase, 4 wire, unbalanced.

Rated voltage (Un)	100, 110,230 or 400 V
Burden	1 mA per phase
Operating range	20-120 % Un
Rated current (In)	1 or 5 A
Burden	0,2 VA per phase
Operating range	1- 120 % In
Frecuency	50-60 Hz

CONTACTS OUTPUT (LCA-C model)

Number of outputs	2
Type	N.O. Relay 250V , 3A

SERIAL PORT (LCA-C model)

Type	RS485
Connection	2 wire
Baud rate (standard)	9600 bauds
Max. Nº. of instruments per line	32
Max. lengh of system per line (without amplifier)	1250 m

(On request, RS232 serial port)

ACCURACY

Parameter	Operating range	Accuracy
Voltage	20-120 %	0,3%(read.+ full scale)
Current	1-120%	0,3%(read.+ full scale)
Active power	1-120%	0,3%(read.+ full scale)
Reactive power	1-120%	0,3%(read.+ full scale)
Apparent power	1-120%	0,5%(read.+ full scale)
Power factor	-0,5/+0,5	0,6%(read.)
Frecuency	45-65 Hz	0,2% (rated freq.)
Active energy	5-120%	1% read.
Reactive energy	5-120%	2% read.

AUXILIARY VOLTAGE

- A. C. Aux. V	63,5/110 V or 230/400 V
Burden	3 VA
Operating range	80-120 % Un
- D.C. Aux. V	18-72 V
Burden	3 W
- UNIVERSAL Aux. V	85...265 V A.C./95...300 V D.C.
Burden	3 VA

GENERAL FEATURES

Display lighting	Back
Case material	Metal+ABS, UL94 V0
Dimensions	DIN 96 x 96 mm
Terminals	Pluggable
Max. wire diameter	2,5 mm^2
Weight	0,35 kg
Protection	IP54 (Front) IP20 (Terminals)
Electrical safety (EN 61010)	Class 2 Category III

ACCESSORIES

x/5 A or x/1 A transformers
RS232 / RS485 converters
RS485 amplifiers

OPTIONAL

Reading software (without additional cost).
Management software SACIgest

CONNECTIONS

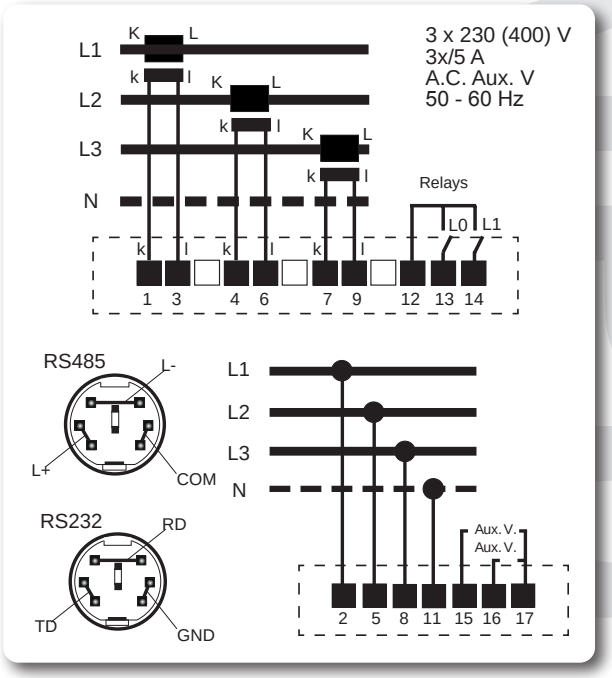

NETWORK ANALYZER - LDA

Instrument with microprocessor, programmable,
LCD display indicating three measurements, and built-in keypad.

- **DIN 96 x 96 INSTRUMENT**
- **MEASUREMENT IN 4 QUADRANTS**
- **THREE-PHASE, 4-WIRE**
- **NEUTRAL CURRENT**
- **HARMONIC DISTORTION (THD V and I)**
- **MAXIMUM DEMAND, A, kW, kVA, kvar**
- **MAX. and MIN. VALUES**
- **TRUE EFFECTIVE VALUE (RMS)**
- **RS232 / RS485 SERIAL PORTS**
- **2 CONTACTS OUTPUT**

MEASURING ENVIRONMENT

ELECTRICAL PARAMETER	Symbol	L1	L2	L3	SYSTEM
Voltage (Line-to-Neutral)	V	●	●	●	
Voltage (Line-to-Line)	V	●	●	●	
Neutral current	A				●
Current	A	●	●	●	
Active power (P)	kW	●	●	●	●
Reactive power (Q)	kVAr	●	●	●	●
Apparent power (S)	kVA	●	●	●	●
Power factor (cos φ)	PF	●	●	●	●
Maximum demand (Current)	A	●	●	●	
Maximum demand (P)	kW				●
Maximum demand (Q)	kVAr				●
Maximum demand (S)	kVA				●
Frecuency	Hz				●
THD Current	A	●	●	●	
THD Voltage	V	●	●	●	
Consumed active energy (EP+)	kW-h				●
Generated active energy (EP-)	kW-h				●
Consumed inductive reactive energy (EQC+)	kvar-h				●
Consumed capacitive reactive energy (EQC-)	kvar-h				●

MODEL

- **LDA-BA** Basic model
  Current insulated
- **LDA-C** Basic model
  Current insulated
  RS485 Serial port
  2 relays

MAXIMUM DEMAND FUNCTION

- Average values of I1, I2, I3, P, Q and S.
- Integration period: 15 or 30 minutes.
- These values can be displayed as current average values and saved as maximums.

SETTING

- Instrument identity code.
- VT Ratio.
- CT Ratio.
- Contact operating mode.

SERIAL PORT (Model LDA-C)

- Type: RS485
- Protocol MODBUS RTU
- Baud rate Programmable
  300 – 19200 bauds
  Standard 9600 bauds

CONTACTS OUTPUT (LDA-C Model)

Type: Voltage free contacts (Relays).
CONTACTS OUTPUT can be set as max or min alarm contacts associated to any measured parameter, or as active energy (EP+) and reactive energy (EQL) pulses. They also can be set as contacts operated from the central unit.

LCD DISPLAY

- LCD display with built-in keypad.
- Height of digits: 14 mm (3 parameters per page).
- Over 30 measuring parameters in different pages.
- Pages selectable with up(↑) and down(↓) Keys.
- Back lighting.

MAX. AND MIN. VALUES

Max. and min. values of: V_1, V_2, V_3,V_{12}, V_{23}, V_{31}, I_1, I_2, I_3, P_1, P_2, P_3, P, Q, S, cos φ, and Hz.

TECHNICAL ESPECIFICATIONS

INPUT

4-phase wire, unbalanced.

Rated voltage (Un)	100, 110, 230 or 400 V
Burden	1 mA per phase
Operating range	20-120 % Un
Rated voltage(In)	1 or 5 A
Burden	0,2 VA per phase
Operating range	1- 120 % In
Frecuency	50-60 Hz

CONTACTS OUTPUT (Model LDA-C)

Number of outputs	2
Type	N.O. relay 250 V, 3 A

CONNECTIONS

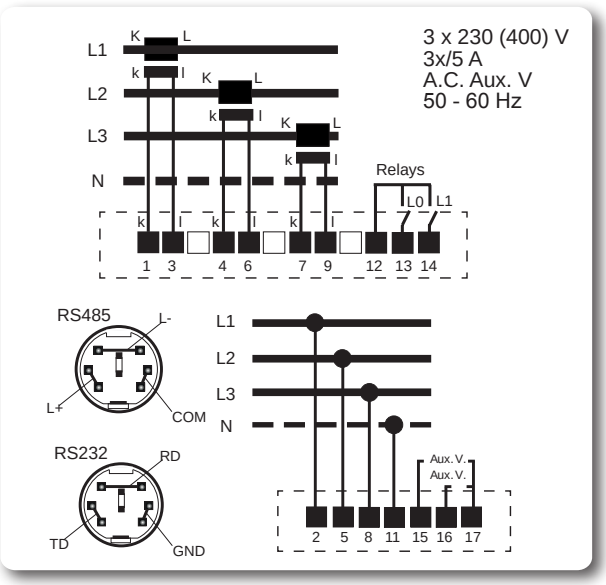

CONTACTS OUTPUT (LDA-C Model)

Type	RS485
Connection	2 wire
Baud rate	Programmable
Baud rate (standard)	9600 bauds
Max. Nº. of instruments per line	32
Max. lengh of system per line (without amplifier)	1250 m
(On request, RS232 serial port)	

AUXILIARY VOLTAGE

- A.C. Aux. V	63,5/110 V or 230/400 V
Burden	3 VA
Operating range	80-120 % Un
- D.C. Aux. V	18-72 V
Burden	3 W
- UNIVERSAL Aux. V	85...265 V A.C./95...300 V D.C.
Burden	3 VA

GENERAL FEATURES

Display lighting	Back
Case material	Metal+ABS, UL94 V0
Dimensions	DIN 96 x 96 mm
Terminals	Pluggable
Max. wire diameter	2,5 mm^2
Weight	0,35 kg
Protection	IP54 (Front) IP20 (Terminals)
Electrical safety (EN 61010)	Class 2 Category III

ACCESSORIES

x/5 A or x/1 A transformers
RS232 / RS485 converters
RS485 amplifiers

OPTIONAL

Reading software (without additional cost).
Management software SACIgest

ACCURACY

Parameter	Operating range	Accuracy
Voltage	20-120 %	0,3%(read.+ full scale)
Current	1-120%	0,3%(read.+ full scale)
Active power	1-120%	0,3%(read.+ full scale)
Reactive power	1-120%	0,3%(read.+ full scale)
Apparent power	1-120%	0,5%(read.+ full scale)
Power factor	-0,5/+0,5	0,6%(read.)
Frecuency	45-65 Hz	0,2% (Rated freq.)
Active energy	5-120%	1% read.
Reactive energy	5-120%	2% read.

NETWORK ANALYZER - LAB 96

Instrument with microprocessor, programmable, LCD display indicating three measurements, and built-in keypad.

- **DIN 96 x 96 INSTRUMENT**
- **MEASUREMENT IN 4 QUADRANTS**
- **THREE-PHASE 3 or 4 WIRE**
- **NEUTRAL CURRENT**
- **HARMONIC DISTORTION (THD V and I)**
- **HARMONICS MEASURING (up to 15)**
- **MAXIMUM DEMAND, A, kW, kVA**
- **MAX. and MIN. VALUES**
- **TRUE EFFECTIVE VALUE (RMS)**
- **RS485 SERIAL PORT**
- **1 CONTACT OUTPUT**

MEASURING ENVIRONMENT

ELECTRICAL PARAMETER	Symbol	L1	L2	L3	SYSTEM
Voltage (Line-to-Neutral)	V	●	●	●	
Voltage (Line-to-Line)	V	●	●	●	
Neutral current	In				●
Current	A	●	●	●	●
Active power (P)	kW	●	●	●	●
Inductive reactive power (QL)	kVAr	●	●	●	●
Capacitive reactive power (QC)	kVAr	●	●	●	●
Apparent power (S)	kVA				●
Power factor (cos φ)	PF	●	●	●	●
Maximum demand (Current)	A	●	●	●	●
Maximum demand (P)	kW				●
Maximum demand (S)	kVA				●
Frecuency	Hz				●
THD Current	% A	●	●	●	15th
THD Voltage	% V	●	●	●	15th
Consumed active energy (EP+)	kW-h				●
Consumed inductive reactive energy (EQL)	KvarL-h				●
Consumed capacitive reactive energy (EQC)	KvarC-h				●
Consumed apparent energy (ESC+)	kVA-h				●
Generated active energy (EP-)	-kW-h				●
Generated inductive reactive energy(EQC+)	-kvarL-h				●
Generated capacitive reactive energy (EQC-)	-kvarC-h				●
Generated apparent energy (ES-)	-kVA-h				●

MODEL

- **LAB96-B** Basic model
- **LAB96-BA** Basic model
  Current insulated
- **LAB96-C** Basic model
  Current insulated
  Salida Serie RS-485
  1 Relay

MODEL

- **LAB96-CH** **LAB96-C**
  Harmonic measuring (up to15)
- **LAB96 - U** **LAB96-C**
  UNIVERSAL auxiliary power supply

MAXIMUM DEMAND FUNCTION

- Average values of I1, I2, I3, P and S.
- Integration period: 1 to 60 minutes.

SETTING

- Instrument identity code.
- VT Ratio.
- CT Ratio.
- Contact operating mode.

SERIAL PORT (LAB96-C, -CH, -U Models)

- Type:	RS485
- Protocol	MODBUS RTU
- Baud rate	Programmable 300 – 19200 bauds Standard 9600 bauds

CONTACTS OUTPUT (LAB96-C, CH, -U Models)

Type: Opto-insulated transistor (open collector).
CONTACTS OUTPUT can be set as max or min alarm contacts associated to a measured parameter, or as active energy (EP+) and reactive energy (EQL) pulses.

LCD DISPLAY

- LCD display with built in keypad.
- Height of digits: 8mm (a parameters per page).
- Back lighting.

VALORES MÁX.- MÍN.-

Max. and min. values of: V_1, V_2, V_3,V_{12}, V_{23}, V_{31}, I_1, I_2, I_3, P_1, P_2, P_3, P, Q, S, cos φ, and Hz.

TECHNICAL ESPECIFICATIONS

INPUT

3-phase 3 or 4 wire, balanced or unbalanced.

Rated voltage (Un)	300 V (line-to-neutral) 520 V (line-to-line)
Burden	0,7 VA
Rated current (In)	5 A
Burden	0,75 VA
Operating range	0- 110 % In
Frecuency	45-65 Hz

CONTACTS OUTPUT

Number of outputs	1
Type	Opto-insulated transistor (open colector) NPN 24 V D.C., 50 mA

ACCURACY

Parameter	Operating range	Accuracy
Voltage	10-100 %	0,5% ± 2 digits
Current	10-100 %	0,5% ± 2 digits
Active power	10-100 %	1% ± 2 digits
Reactive power	10-100 %	1% ± 2 digits
Apparent power	10-100 %	1% ± 2 digits
Power factor	0,5-1	± 6º
Frecuency	45-65 Hz	0,2% ± 2 digits
Active energy	10-100 %	1% ± 2 digits
Reactive energy	10-100 %	1% ± 2 digits

SERIAL PORT (LAB96-C, -CH,-U Models)

Type	RS485
Connection	2 wire
Baud rate	Programmable
Baud rate (standard)	9600 bauds
Max. Nº. of instruments per line	32
Max. lengh of system per line (without amplifier)	1200 m

AUXILIARY VOLTAGE

- A. C. Aux. V	230 V
Burden	5 VA
Operating range	85-110 % Un
- UNIVERSAL Aux. V	85...265 V A.C./95...300 V D.C.
Burden	5 VA
Frecuency	50- 60 Hz A.C.

GENERAL FEATURES

Case material	UL94 V0
Dimensions	DIN 96 x 96 mm (fondo 63)
Terminals	Pluggable
Max. wire diameter	2,5 mm^2
Weight	0,40 kg
Protection	IP51 (Front) IP31 (Terminals)
Electrical safety (EN 61010)	Class 2 Category III

ACCESSORIES

x/5 A or x/1 A transformers
RS232 / RS485 converters
RS485 amplifiers

OPTIONAL

Management software SACIgest

CONNECTIONS

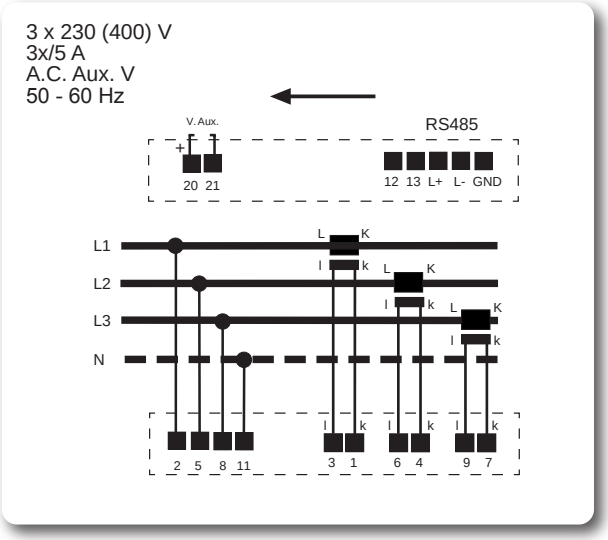

NETWORK ANALYZER - LABM

Instrument with microprocessor, programmable, LCD display indicating three measurements, and built-in keypad.

- **MODULAR DIN INSTRUMENT**
- **MEASUREMENT IN 4 QUADRANTS**
- **THREE-PHASE 3 or 4 WIRE**
- **NEUTRAL CURRENT**
- **HARMONIC DISTORTION (THD V and I)**
- **HARMONICS MEASURING (up to 15)**
- **MAXIMUM DEMAND, A, kW, kVA**
- **MAX. and MIN. VALUES**
- **TRUE EFFECTIVE VALUE (RMS)**
- **RS485 SERIAL PORT**
- **2 CONTACTS OUTPUT**
- **CURRENTS, 100, 250 or 500 A (t/e)**
- **INTERNAL TEMPERATURE SENSOR**

MEASURING ENVIRONMENT

ELECTRICAL PARAMETER	Symbol	L1	L2	L3	SYSTEM
Voltage (Line-to-Neutral)	V	●	●	●	
Voltage (Line-to-Line)	V	●	●	●	
Neutral current	In				●
Current	A	●	●	●	●
Active power (P)	kW	●	●	●	●
Inductive reactive power (QL)	kVAr	●	●	●	●
Capacitive reactive power (QC)	kVAr	●	●	●	●
Apparent power (S)	kVA				●
Power factor (cos φ)	PF	●	●	●	●
Maximum demand (Current)	A	●	●	●	●
Maximum demand (P)	kW				●
Maximum demand (S)	kVA				●
Frecuency	Hz				●
THD Current	% A	●	●	●	15th
THD Voltage	% V	●	●	●	15th
Consumed active energy (EP+)	kW-h				●
Consumed inductive reactive energy (EQL)	KvarL-h				●
Consumed capacitive reactive energy (EQC)	KvarC-h				●
Consumed apparent energy (ESC+)	kVA-h				●
Generated active energy (EP-)	-kW-h				●
Generated inductive reactive energy(EQC+)	-kvarL-h				●
Generated capacitive reactive energy (EQC-)	-kvarC-h				●
Generated apparent energy (ES-)	-kVA-h				●

MODEL

- **LABM-B** Basic model
- **LABM-BA** Basic model
  Current insulated
- **LABM-C** Basic model
  Current insulated
  RS-485 Serial port
  1 Relay

MODEL

- **LABM-CH** LABM-C
  Harmonic measuring (up to 15)
- **LABM-U** LABM-C
  UNIVERSAL auxiliary power supply

MAXIMUM DEMAND FUNCTION

- Average values of I1, I2, I3, P and S.
- Integration period: 1 to 60 minutes

SETTING

- Instrument identity code.
- VT Ratio.
- CT Ratio.
- Contact operating mode.

CONTACTS OUTPUT (LABM-C, -CH, -U Models)

- Type:	RS485
- Protocol	MODBUS RTU
- Baud rate	Programmable 300 – 19200 bauds Standard 9600 bauds

CONTACTS OUTPUT (LABM-C, CH, -U Models)

Type: Opto-insulated transistor (open colector).
CONTACTS OUTPUT can be set as max or min alarm contacts associated to a measured parameter, or as active energy (EP+) and reactive energy (EQL) pulses.

LCD DISPLAY

- LCD display with built in keypad.
- 4 parameters per page.
- Back lighting..

MAX. AND MIN. VALUES

- Max. and min. values of: V_1, V_2, V_3,V_{12}, V_{23}, V_{31}, I_1, I_2, I_3, P_1, P_2, P_3, P, Q, S, cos φ, and Hz.

TECHNICAL ESPECIFICATIONS

INPUT

3-phase 3 or 4 wire, balanced or unbalanced.

Rated voltage (Un)	300 V (line-to-neutral) 520 V (line-to-line)
Burden	0,7 VA
Rated voltage(In)	100, 250 or 500 A
External current transformers (included)	
Burden	0,75 VA
Operating range	0- 120 % In
Burden	0,9 VA
Frecuency	45-65 Hz

CONTACTS OUTPUT

Number of outputs	2
Type	Opto-insulated transistor (Open colector) NPN 24 V D.C., 50 mA

ACCURACY

Parameter	Operating range	Accuracy
Voltage	10-100 %	0,5% ± 2 digits
Current	10-100 %	0,5% ± 2 digits
Active power	10-100 %	1% ± 2 digits
Reactive power	10-100 %	1% ± 2 digits
Apparent power	10-100 %	1% ± 2 digits
Power factor	0,5-1	± 6º
Frecuency	45-65 Hz	0,2% ± 2 digits
Active energy	10-100 %	1% ± 2 digits
Reactive energy	10-100 %	1% ± 2 digits

SERIAL PORT (LABM-C, -CH, -U Models)

Type	RS485
Connection	2 wire
Baud rate	Programmable
Baud rate (standard)	9600 bauds
Max. Nº. of instruments per line	32
Max. lengh of system per line (without amplifier)	1200 m

AUXILIARY VOLTAGE

- A. C. Aux. V	230 V
Burden	5 VA
Operating range	85-110 % Un
- UNIVERSAL Aux. V	85...265 V A.C./95...300 V D.C.
Burden	5 VA
Frecuency	50- 60 Hz A.C.

GENERAL FEATURES

Case material	UL94 V0
Dimensions	(3 Modulos) 52,5 x 85 mm
Terminals	Pluggable
Max. wire diameter	2,5 mm^2
Weight	0,21 kg
Protection	IP41 (Front) IP20 (Terminals)
Electrical safety (EN 61010)	Class 2 Category III

ACCESSORIES

x/5 A or x/1 A transformers
RS232 / RS485 converters
RS485 amplifiers

OPTIONAL

Management software SACIgest

CONNECTIONS

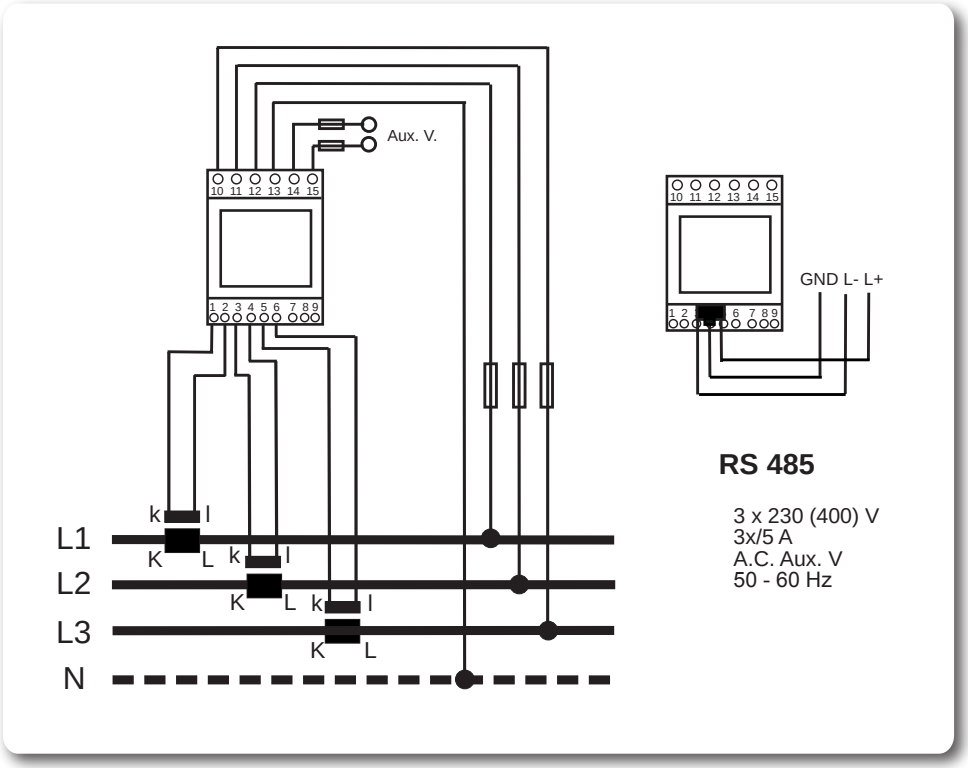

ANALIZADOR DE RED - AR3AC

Programmable instrument with microprocessor
and LCD display indicator for measurements

- **DIN MODULAR INSTRUMENT**
- **SINGLE-PHASE**
- **RMS**
- **RS485 SERIAL PORTS**
- **VALUE ALTERNATIVE MEASURE EVERY 4 s.**
- **1 CONTACT OUTPUT**

MEASURING ENVIRONMENT

ELECTRICAL PARAMETER	Symbol	SYSTEM
Voltage (Line-to-Neutral)	V	•
Current	A	•
Active power (P)	kW	•
Reactive power (Q)	kVAr	•
Apparent power (S)	kVA	•
Power factor (cos φ)	PF	•
Frecuency	Hz	•
Consumed active energy (EP+)	kW-h	•
Generated active energy (EP-)	-kW-h	•
Consumed inductive reactive energy (EQC+)	kvarL-h	•
Consumed capacitive reactive energy (EQC-)	kvarC-h	•

MODEL

- **AR3AC**

SETTING

- Instrument identity code.
- CT Ratio.
- Contacts operating mode.
- Energy pulse value

The equipment is set through the serial output

SERIAL PORT

- Type:	RS485
- Protocol	MODBUS RTU
- Baud rate	Optional Standard 9600 bauds

CONTACT OUTPUTS

Type: voltage free contacts. Contact outputs can be set as max. or min. alarm contacts associated to any measured parameter or as active energy (Kwh+) and reactive energy (Kwh-) pulses. They can also be set as contacts managed from the central unit.

LCD DISPLAY

- 1 Display LCD (4 Dígitos + sign).
- Height of digits: 8 mm.
- Up to 11 measurig parameters.

TECHNICAL ESPECIFICATIONS

INPUT

Rated voltage (Un)	230 V A.C.
Burden	1mA
Operating range	20-120 % Un
Rated current(In)	
Direct connection	30 A A.C.
Connection to external transformers	x/5 A
Operating range	1-120 % In

SERIAL PORT

MODEL

- RS485

Connection	2 or 4 wire
Baud rate	Optional
Baud rate (standard)	9600 bauds
Max. Nº. of instruments per line	32

CONTACTS OUTPUT

Number of outputs	1
Type	N.O. relay 250 V, 3 A

AUXILIARY VOLTAGE

- A. C. Aux. V	Self supplied

GENERAL FEATURES

Mounting	Carril DIN
Case material	ABS, UL94 V0
Dimensions	3 Modules DIN (52x90) mm Terminals with screws
Max. wire diameter	16 mm^2
Weight	0,150 kg
Operating temperature	0-40º C
Protection	IP54 (Front) IP20 (Terminals)
Electrical safety (EN 61010)	Class 2 Category III

ACCESSORIES

x/5 A transformers
RS232 / RS485 converters
RS485 amplifiers

OPTIONAL

Reading software (without additional cost).
Management software SACIgest

ACCURACY

Parameter	Operating range	Accuracy
Voltage	20-120 %	0,3%(read.+ full scale)
Current	1-120%	0,3%(read.+ full scale)
Active power	1-120%	0,3%(read.+ full scale)
Reactive power	1-120%	0,3%(read.+ full scale)
Apparent power	1-120%	0,4%(read.+ full scale)
Power factor	-0,5/+0,5	1%(FE)
Frecuency	45-65 Hz	0,2% (FE)
Active energy	5-120%	0,5% read.
Reactive energy	5-120%	1% read.

CONNECTIONS

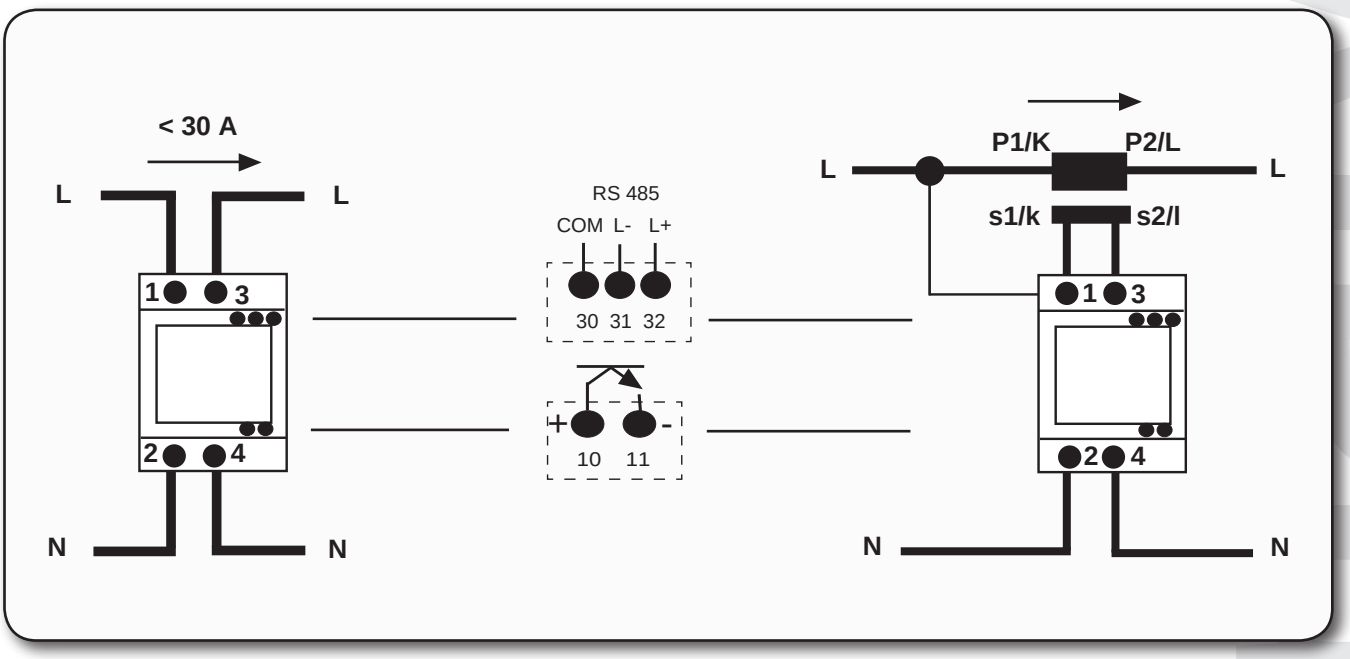

ANALIZADOR DE RED - LCCM

Instrument with microprocessor, programmable, LCD display indicating three measurements, and built-in keypad.

- **DIN RAIL MOUNTING**
- **MEASUREMENT IN 4 QUADRANTS**
- **BALANCED or UNBALANCED SYSTEMS**
- **NEUTRAL CURRENT**
- **MAXIMUM DEMAND, A, kW, kVA, kvar**
- **MAX.- and MIN.- VALUES**
- **TRUE EFFECTIVE VALUE (RMS)**
- **2 PULSE or ALARM OUTPUTS**
- **SELF SUPPLIED**

MEASURING ENVIRONMENT

ELECTRICAL PARAMETER	Symbol	L1	L2	L3	SYSTEM
Voltage (Line-to-Neutral)	V	●	●	●	
Voltage (Line-to-Line)	V	●	●	●	
Neutral current	A				●
Current	A	●	●	●	
Active power (P)	kW	●	●	●	●
Reactive power (Q)	kVAr	●	●	●	●
Apparent power (S)	kVA	●	●	●	●
Power factor (cos φ)	PF	●	●	●	●
Maximum demand (Current)	A	●	●	●	
Maximum demand (P)	kW				●
Maximum demand (Q)	kVAr				●
Maximum demand (S)	kVA				●
Frecuency	Hz				●
Consumed active energy (EP+)	kW-h				●
Generated active energy (EP-)	kW-h				●
Consumed inductive reactive energy (EQC+)	kvar-h				●
Consumed capacitive reactive energy (EQC-)	kvar-h				●

MODEL

- LCCM

SETTING

- Instrument identity code.
- VT Ratio.
- CT Ratio.
- 2 outputs operating mode.
- Balanced or unbalanced system.

PULSE - ALARM OUTPUTS

Type: voltage free contacts.
The pulse alarm outputs can be set as max. or min. alarm contacts associated to any measured parameter, or as active energy pulses (EP+) and reactive energy pulses (EQL).

DISPLAY LCD

- LCD display with built-in keypad.
- Over 30 measuring parameters in different pages.
- Pages selectable with up (↑) and and down (↓).
- Back lighting.

MAX. AND MIN. VALUES

- Max. and min. values of: V_1, V_2, V_3,V_{12}, V_{23}, V_{31}, I_1, I_2, I_3, IN, P, Q and S.
- Min. values of: V_1, V_2, V_3,V_{12}, V_{23}, V_{31}.

MAXIMUND DEMAND

- Average values of I1, I2, I3, IN, P, Q and S
- Integration Period: 5, 10, 30, 60, 300, 480, 600, or 900 s.
- This values can be displayed as current average values and saved as maximums.

TECHNICAL ESPECIFICATIONS

INPUT

3-phase 3 wire, balanced or
3-phase 4 wire, unbalanced.

Rated voltage (Un)	400 V
Burden	20 mA per phase
Operating range	80-120 % Un
Rated voltage(In)	1 or 5 A
Burden	0,2 VA per phase
Operating range	1- 120 % In
Frecuency	50-60 Hz

CONTACTS OUTPUT

Number of outputs	2
Type	N.O. Optocoupler
	< 48V D.C.(24V D.C. 1 kΩ)
Weight de imp. (Energy)	1 or 0,1 imp./kWh
Pulse length	100 ms

ACCURACY

Parameter	Operating range	Accuracy
Voltage	80-120 %	0,3%(read.+ full scale)
Current	1-120%	0,3%(read.+ full scale)
Active power	1-120%	0,3%(read.+ full scale)
Reactive power	1-120%	0,3%(read.+ full scale)
Apparent power	1-120%	0,5%(read.+ full scale)
Power factor	-0,5/+0,5	0,6%(read.)
Frecuency	45-65 Hz	0,2% (rated freq.)
Active energy	5-120%	1% read.
Reactive energy	5-120%	2% read.

GENERAL FEATURES

Display lighting	Back
Case material	ABS, UL94 V0
Dimensions	(6 Modules) 105 x 90 mm
Terminals	Pluggable
Max. wire diameter	2,5 mm^2
Weight	0,35 kg
Protection	IP54 (Front)
	IP20 (Terminals)
Electrical safety (EN 61010)	Class 2
	Category III

ACCESSORIES

x/5 A or x/1 A transformers

CONNECTIONS

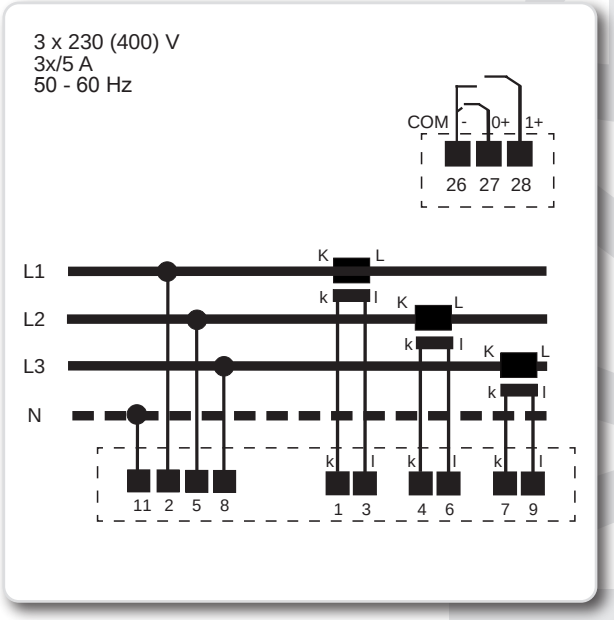

NETWORK ANALYZER - LCAM

Instrument with microprocessor, programmable, LCD display indicating three measurements, and built-in keypad.

- **DIN RAIL MOUNTING**
- **MEASUREMENT IN 4 QUADRANTS**
- **THREE-PHASE, 4-WIRE**
- **HARMONIC DISTORTION (THD V and I)**
- **MAX. and MIN. VALUES**
- **TRUE EFFECTIVE VALUE (RMS)**
- **RS232 / RS485 SERIAL PORTS**
- **2 CONTACTS OUTPUT**

MEASURING ENVIRONMENT

ELECTRICAL PARAMETER	Symbol	L1	L2	L3	SYSTEM
Voltage (Line-to-Neutral)	V	(*)	(*)	(*)	
Voltage (Line-to-Line)	V	●	●	●	
Current	A	●	●	●	
Active power (P)	kW	●	●	●	●
Reactive power (Q)	kVAr	●	●	●	●
Apparent power (S)	kVA	●	●	●	●
Power factor (cos φ)	PF	●	●	●	●
Frecuency	Hz				●
THD Current	A	●	●	●	
THD Voltage	V	●	●	●	
Consumed active energy (EP+)	kW-h				●
Generated active energy (EP-)	kW-h				●
Consumed inductive reactive energy (EQC+)	kvar-h				●
Consumed capacitive reactive energy (EQC-)	kvar-h				●

(*) Via serial port only

MODEL

- **LCAM-BA** Basic model
  Current insulated
- **LCAM-C** Basic model
  Current insulated
  RS485 Serial port
  2 relays

SETTING

- Instrument identity code.
- VT Ratio.
- CT Ratio.
- Contact operating mode.

SERIAL PORT (LCAM-C Model)

- Type: RS485
- Protocol: MODBUS RTU
- Baud rate: Programmable 300 – 19200 bauds

CONTACTS OUTPUT (LCAM-C Model)

Type: Voltage free contacts (relays).
CONTACTS OUTPUT can be set as max or min alarm contacts associated to any measured parameter, or as active energy (EP+) and reactive energy (EQL) pulses. They also can be set as contacts operated from the central unit.

LCD DISPLAY

- LCD display with built-in keypad.
- Over 30 measuring parameters in different pages.
- Pages selectable with up (↑) and and down (↓).
- Back lighting.

MAX. AND MIN. VALUES

- Max. and min. values of: V_1, V_2, V_3, V_{12}, V_{23}, V_{31}, I_1, I_2, I_3, P_1, P_2, P_3, P, Q, S, cos φ, and Hz.

TECHNICAL ESPECIFICATIONS

INPUT

4-phase wire, unbalanced.

Rated voltage (Un)	100, 110, 230 or 400 V
Burden	1 mA per phase
Operating range	20-120 % Un
Rated voltage(In)	1 or 5 A
Burden	0,2 VA per phase
Operating range	1- 120 % In
Frecuency	50 or 60 Hz

CONTACTS OUTPUT (LCAM-C Model)

Number of outputs	2
MODEL	N.O. relay 250 V, 3 A

SERIAL PORT (only LCAM-C Model)

Type	RS485
Connection	2 wire
Baud rate (standard)	9600 bauds
Max. Nº. of instruments per line	32
Max. lengh of system per line (without amplifier)	1250 m

(On request, RS232 serial port)

ACCURACY

Parameter	Operating range	Accuracy
Voltage	20-120 %	0,3%(read.+ full scale)
Current	1-120%	0,3%(read.+ full scale)
Active power	1-120%	0,3%(read.+ full scale)
Reactive power	1-120%	0,3%(read.+ full scale)
Apparent power	1-120%	0,5%(read.+ full scale)
Power factor	-0,5/+0,5	0,6%(read.)
Frecuency	45-65 Hz	0,2% (rated freq.)
Active energy	5-120%	1% read.
Reactive energy	5-120%	2% read.

AUXILIARY VOLTAGE

A. C. Aux. V	63,5/110 V or 230/400 V
Burden	3 VA
Operating range	80-120 % Un

GENERAL FEATURES

Display lighting	Back
Mounting	Carril DIN
Case material	ABS, UL94 V0
Dimensions	(6 Modules) 105 x 90 mm
Terminals	Pluggable
Max. wire diameter	2,5 mm^2
Weight	0,35 kg
Protection	IP54 (Front) IP20 (Terminals)
Electrical safety (EN 61010)	Class 2 Category III

ACCESSORIES

x/5 A or x/1 A transformers
RS232 / RS485 converters
RS485 amplifiers

OPTIONAL

Reading software (without additional cost).
Management software SACIgest

CONNECTIONS

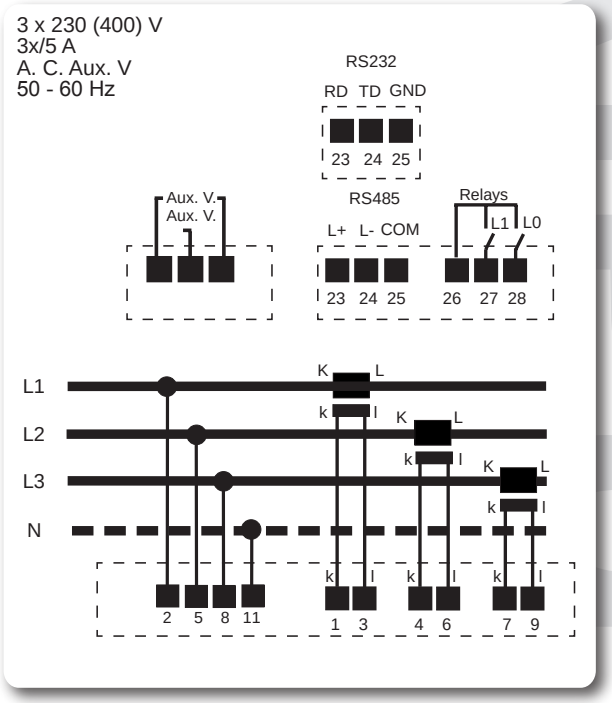

NETWORK ANALYZER - LDA 144

Instrument with microprocessor, programmable, LCD display indicating three measurements, and built-in keypad.

- **DIN 144 x 144 INSTRUMENT**
- **MEASUREMENT IN 4 QUADRANTS**
- **THREE-PHASE, 4-WIRE**
- **NEUTRAL CURRENT**
- **HARMONIC DISTORTION (THD V and I)**
- **MAXIMUM DEMAND, A, kW, kVA, kvar**
- **MAX. and MIN. VALUES**
- **TRUE EFFECTIVE VALUE (RMS)**
- **RS232 / RS485 SERIAL PORTS**
- **2 CONTACTS OUTPUT**

MEASURING ENVIRONMENT

ELECTRICAL PARAMETER	Symbol	L1	L2	L3	SYSTEM
Voltage (Line-to-Neutral)	V	●	●	●	
Voltage (Line-to-Line)	V	●	●	●	
Neutral current	A				●
Current	A	●	●	●	
Active power (P)	kW	●	●	●	●
Reactive power (Q)	kVAr	●	●	●	●
Apparent power (S)	kVA	●	●	●	●
Power factor (cos φ)	PF	●	●	●	●
Maximum demand (Current)	A	●	●	●	
Maximum demand (P)	kW				●
Maximum demand (Q)	kVAr				●
Maximum demand (S)	kVA				●
Frecuency	Hz				●
THD Current	A	●	●	●	
THD Voltage	V	●	●	●	
Consumed active energy (EP+)	kW-h				●
Generated active energy (EP-)	kW-h				●
Consumed inductive reactive energy (EQC+)	kvar-h				●
Consumed capacitive reactive energy (EQC-)	kvar-h				●

MODEL

- **LDA144-B** Basic model
- **LDA144-BA** Basic model
  Current insulated
- **LDA144-C** Basic model
  Current insulated
  RS485 Serial port
  2 relays

MAXIMUM DEMAND FUNCTION

- Average values of I1, I2, I3, P, Q and S.
- Integration period: 15 or 30 minutes.
- These values can be displayed as current average values and saved as maximums.

SETTING

- Instrument identity code.
- VT Ratio.
- CT Ratio.
- Contacts operating mode.

SERIAL PORT (LDA144-C Model)

- Type: RS485
- Protocol MODBUS RTU
- Baud rate Programmable
  300 – 19200 bauds
  Standard 9600 bauds

CONTACTS OUTPUT (LDA144-C Model)

Type: Voltage free contacts (relays).
CONTACTS OUTPUT can be set as max or min alarm contacts associated to any measured parameter, or as active energy (EP+) and reactive energy (EQL) pulses. They also can be set as contacts operated from the central unit.

LCD DISPLAY

- LCD display with built in keypad.
- Height of didits: 14 mm (3 parameters per page)
- Over 30 measuring parameters in different pages.
- Pages selectable with up (↑) and and down (↓).
- Back lighting.

MAX. AND MIN. VALUES

- Max. and min. values of: V_1, V_2, V_3,V_{12}, V_{23}, V_{31}, I_1, I_2, I_3, P_1, P_2, P_3, P, Q, S, cos φ, and Hz.

TECHNICAL ESPECIFICATIONS

INPUT

4-phase wire, unbalanced.

Rated voltage (Un)	100, 110, 230 or 400 V
Burden	1 mA per phase
Operating range	20-120 % Un
Rated voltage(In)	1 or 5 A
Burden	0,2 VA per phase
Operating range	1- 120 % In
Frecuency	50-60 Hz

CONTACTS OUTPUT (Modelo LDA-C)

Number of outputs	2
Type	N.O. relay 250 V, 3 A

CONNECTIONS

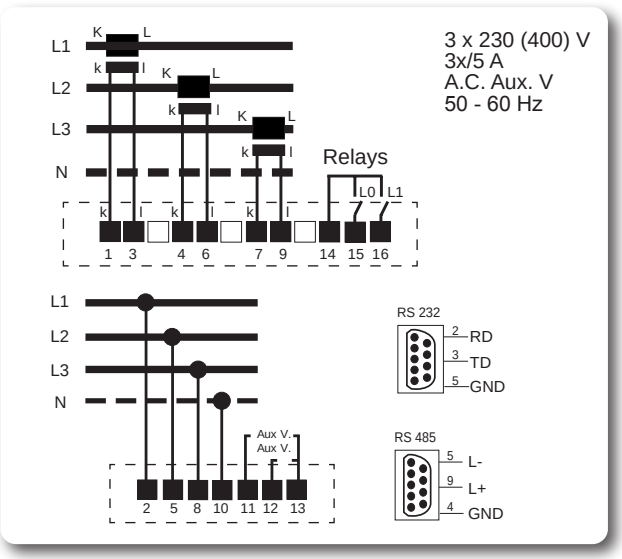

SERIAL PORT (LDA-C Model)

Type	RS485
Connection	2 or 4 wire
Baud rate	Programmable
Baud rate (standard)	9600 bauds
Max. Nº. of instruments per line	32
Max. lengh of system per line (without amplifier)	1250 m

(On request, RS232 serial port)

AUXILIARY VOLTAGE

- A. C. Aux. V	63,5/110 V or 230/400 V
Burden	3 VA
Operating range	80-120 % Un
- D.C. Aux. V	18/72 V
Burden	3 W
- UNIVERSAL Aux. V	85...265 V A.C./95...300 V D.C.
Burden	5 VA

GENERAL FEATURES

Display lighting	Back
Case material	Metal+ABS, UL94 V0
Dimensions	DIN 144 x 144 mm
Terminals	Pluggable
Max. wire diameter	2,5 mm^2
Weight	0,85 kg
Protection	IP54 (Front) IP20 (Terminals)
Electrical safety (EN 61010)	Class 2 Category III

ACCESSORIES

x/5 A or x/1 A transformers
RS232 / RS485 converters
RS485 amplifiers

OPTIONAL

Reading software (without additional cost).
Management software SACIgest

ACCURACY

Parameter	Operating range	Accuracy
Voltage	20-120 %	0,3%(read.+ full scale)
Current	1-120%	0,3%(read.+ full scale)
Active power	1-120%	0,3%(read.+ full scale)
Reactive power	1-120%	0,3%(read.+ full scale)
Apparent power	1-120%	0,5%(read.+ full scale)
Power factor	-0,5/+0,5	0,6%(read.)
Frecuency	45-65 Hz	0,2% (rated freq.)
Active energy	5-120%	1% read.
Reactive energy	5-120%	2% read.

NETWORK ANALYZER - LDA 144 with Memory

Instrument with microprocessor, programmable, LCD display indicating three measurements, and built-in keypad.

- **LOAD CURVE UP TO 60 DAYS**
- **RECORDING UP TO 4000 ALARM DATA**
- **MEASUREMENT IN 4 QUADRANTS**
- **THREE-PHASE, 4-WIRE**
- **NEUTRAL CURRENT**
- **HARMONIC DISTORTION (THD V and I)**
- **MAXIMUM DEMAND, A, kW, kVA, kvar**
- **MAX. and MIN. VALUES**
- **TRUE EFFECTIVE VALUE (RMS)**
- **RS232 (front) / RS485 (rear) SERIAL PORT**
- **2 CONTACTS OUTPUT**

ROTATING MEMORY

The equipment is equipped with a rotating memory to store the following values:

1 - FIXED

1.1 - Average values of (I_1, I_2, I_3, P, Q and S) at the end of a predeterminated period of time (5, 10, 15, 20, o 30 minutes, selectable) and their corresponding maximun values.

1.2 - Acumulated EP+ value.

- 60 days + 4000 alarms storage.

2 - PROGRAMMABLE

2.1 - Up to maximum of 9 variables can be selected from the folowing(V1, V2, V3, V12, V23, V31, P1, P2, P3, Q1, Q2, Q3, S1, S2, S3, cos φ1, cos φ2, cos φ3, cos φ, Hz and I Neutral.), plus the three energy values (EP-, EQL, EQC).

- 45 days + 4000 alarms storage.

Up to 4 alarmas can be set and saved. These can be defined as maximum or minimum, as % of the rated value and measurent variable. Alarm data is recorded with start time, length and variable affected.

MEASURING ENVIRONMENT

ELECTRICAL PARAMETER	Symbol	L1	L2	L3	SYSTEM
Voltage (Line-to-Neutral)	V	●	●	●	
Voltage (Line-to-Line)	V	●	●	●	
Neutral current	A				●
Current	A	●	●	●	
Active power (P)	kW	●	●	●	●
Reactive power (Q)	kVAr	●	●	●	●
Apparent power (S)	kVA	●	●	●	●
Power factor (cos φ)	PF	●	●	●	●
Maximum demand (Current)	A	●	●	●	
Maximum demand (P)	kW				●
Maximum demand (Q)	kVAr				●
Maximum demand (S)	kVA				●
Frecuency	Hz				●
THD Current	A	●	●	●	
THD Voltage	V	●	●	●	
Consumed active energy (EP+)	kW-h				●
Generated active energy (EP-)	kW-h				●
Consumed inductive reactive energy (EQC+)	kvar-h				●
Consumed capacitive reactive energy (EQC-)	kvar-h				●

MODEL

- LDA 144 with memory
  Current insulated.
  RS485 Serial port (rear).
  Salida serie RS232 (front).
  2 relays.

MAXIMUM DEMAND FUNCTION

- Average values of I1, I2, I3, P, Q and S.
- Integration period: the time selected.
- These values can be displayed as current average values and saved as maimums

SETTING

- Instrument identity code.
- VT Ratio.
- CT Ratio.
- Contacts operating mode.

SERIAL PORT

- Type:	RS485
- Protocol	MODBUS RTU
- Baud rate	Programmable 300 – 19200 bauds Standard 9600 bauds

CONTACTS OUTPUT

Type: Voltage free contacts (relays).
CONTACTS OUTPUT can be set as max or min alarm contacts associated to any measured parameter, or as active energy (EP+) and reactive energy (EQL) pulses. They also can be set as contacts operated from the central unit.

LCD DISPLAY

- LCD display with built in keypad.
- Height of didits: 14 mm (3 parameters per page)
- Over 30 measuring parameters in different pages.
- Pages selectable with up (↑) and and down (↓).
- Back lighting..

MAX. AND MIN. VALUES

- Max. and min. values of: V_1, V_2, V_3,V_{12}, V_{23}, V_{31}, I_1, I_2, I_3, P_1, P_2, P_3, P, Q, S, cos φ, and Hz.

TECHNICAL ESPECIFICATIONS

INPUT

4-phase wire, unbalanced.

Rated voltage (Un)	100, 110, 230 or 400 V
Burden	1 mA per phase
Operating range	20-120 % Un
Rated voltage(In)	1 or 5 A
Burden	0,2 VA per phase
Operating range	1- 120 % In
Frecuency	50-60 Hz

ACCURACY

Parameter	Operating range	Accuracy
Voltage	20-120 %	0,3%(read.+ full scale)
Current	1-120%	0,3%(read.+ full scale)
Active power	1-120%	0,3%(read.+ full scale)
Reactive power	1-120%	0,3%(read.+ full scale)
Apparent power	1-120%	0,5%(read.+ full scale)
Power factor	-0,5/+0,5	0,6%(read.)
Frecuency	45-65 Hz	0,2% (Rated freq.)
Active energy	5-120%	1% read.
Reactive energy	5-120%	2% read.

CONTACTS OUTPUT

Number of outputs	2
Type	N.O. relay 250 V, 3 A

SERIAL PORT

Type	RS485
Connection	2 or 4 wire
Baud rate	Programmable
Baud rate (standard)	9600 bauds
Max. Nº. of instruments per line	32
Max. lengh of system per line (without amplifier)	1250 m
RS232 Serial port (on the front)	9600 bauds

AUXILIARY VOLTAGE

- A. C. Aux. V	63,5/110 V or 230/400 V
Burden	3 VA
Operating range	80-120 % Un
- D.C. Aux. V	18/72 V
Burden	3 W
- UNIVERSAL Aux. V	85...265 V A.C./95...300 V D.C.
Burden	5 VA

GENERAL FEATURES

Display lighting	Back
Case material	Metal+ABS, UL94 V0
Dimensions	DIN 144 x 144 mm
Terminals	Pluggable
Max. wire diameter	2,5 mm^2
Weight	0,85 kg
Protection	IP54 (Front) IP20 (Terminals)
Electrical safety (EN 61010)	Class 2 Category III

ACCESSORIES

x/5 A or x/1 A transformers.
RS232 / RS485 converters.
RS485 amplifiers.

OPTIONAL

Reading software (without additional cost).
Management software SACIgest

CONNECTIONS

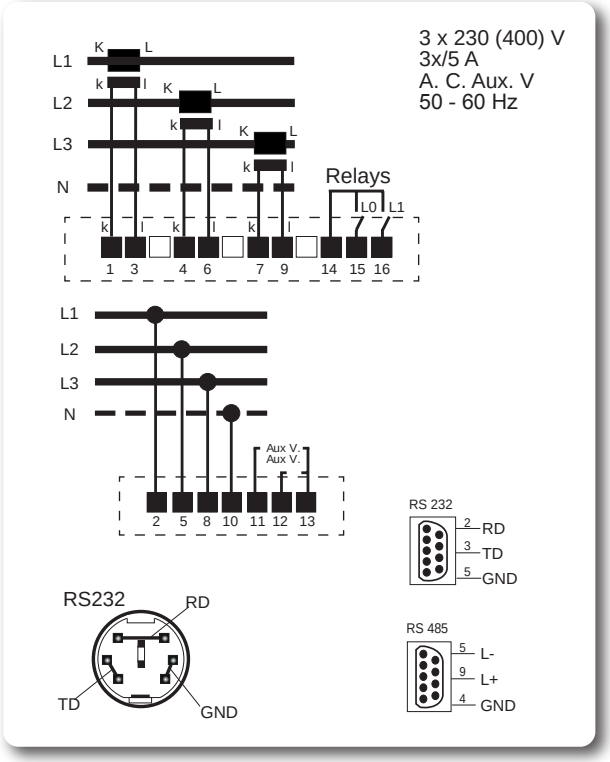

NETWORK ANALYZER - SNG96

Programmable instrument with microprocessor and LCD display indicator for measurements and built-in keypad

- **INSTRUMENT DIN 96X96**
- **THREE-PHASE 3 or 4 WIRE**
- **MAXIMUM DEMAND AT TRUE EFFECTIVE VALUE (RMS)**

MEASURING ENVIRONMENT

ELECTRICAL PARAMETER	Symbol	L1	L2	L3	SYSTEM
Voltage (Line-to-Neutral)	**V**	●	●	●	
Voltage (Line-to-Line)	**V**	●	●	●	
Current	**A**	●	●	●	
Consumed active energy (EP+)	**kW-h**				●
Generated active energy (EP-)	**kW-h**				●

MODEL

- SNG96

SETTING

- CT Ratio.
- Integration time of maximum demand

MAXIMUM DEMAND FUNCTION

- Average values of I1, I2 and I3.
- Integration period: 15 or 30 minutes.

LCD DISPLAY

- Height of digits: 14mm. (4 parameters per page)
- Built in keypad (5 Keys).
- Selectable pages with up (↑) and down (↓).
- Back lighting.

TECHNICAL ESPECIFICATIONS

INPUT

3-phase 3 wire balanced or 3-phase 4 wire unbalanced.

Rated voltage (Un)	400 V
Burden	1 mA per phase
Operating range	50-600 V
Rated current (In)	5 A
Burden	0,3 VA per phase
Operating range	0- 120 % In
Frecuency	50-60 Hz

AUXILIARY VOLTAGE

- Aux. V	Self supplied
Burden	<4 VA

GENERAL FEATURES

Case material	ABS, UL94 V0
Dimensions	DIN 96 x 96 mm
Terminals	Pluggable
Max. wire diameter	2,5 mm²
Weight	0,4 kg
Protection	IP54 (Front) IP20 (Terminals)
Electrical safety (EN 61010)	Class 2 Category III

ACCESSORIES

x/5 A transformers

CONNECTIONS

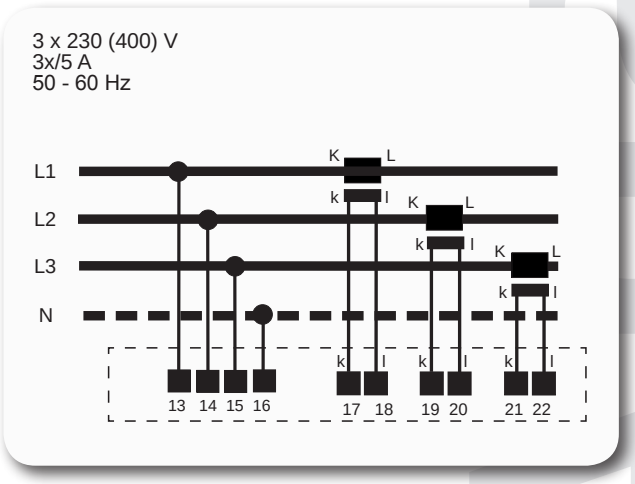

NETWORK ANALYZER - MAR 96

Instrument with microprocessor, programmable, with three LED display indicating measurements and built-in keypad.

- **DIN 96 x 96 INSTRUMENT**
- **MEASUREMENT IN 4 QUADRANTS**
- **THREE-PHASE, 4-WIRE**
- **MAX. and MIN. VALUES**
- **TRUE EFFECTIVE VALUE (RMS)**
- **RS232 / RS485 SERIAL PORTS**
- **2 CONTACTS OUTPUT**

MEASURING ENVIRONMENT

ELECTRICAL PARAMETER	Symbol	L1	L2	L3	SYSTEM
Voltage (Line-to-Neutral)	V	●	●	●	
Voltage (Line-to-Line)	V	●	●	●	
Current	A	●	●	●	
Active power (P)	kW	●	●	●	●
Reactive power (Q)	kVAr	(*)	(*)	(*)	●
Apparent power (S)	kVA	(*)	(*)	(*)	(*)
Power factor (cos φ)	PF	(*)	(*)	(*)	●
Frecuency	Hz				●
Consumed active energy (EP+)	kW-h				●
Generated active energy (EP-)	kW-h				●
Consumed inductive reactive energy (EQC+)	kvar-h				●
Consumed capacitive reactive energy (EQC-)	kvar-h				●

MODEL

- **MAR96**	Single-phase
- **MAR93-I**	Three-phase, 3 wire, balanced
- **MAR96-II**	Three-phase, 3 wire, unbalanced
- **MAR93-3**	Three-phase, 4 wire, unbalanced
	Current insulated
	2 relays
	RS485 Serial port

SETTING

- Instrument identity code.
- VT Ratio.
- CT Ratio.
- Contacts operating mode.

SERIAL PORT

- Type:	RS485
- Protocol	MODBUS RTU
- Baud rate	Programmable
	300 – 19200 bauds
	Standard 9600 bauds

CONTACTS OUTPUT

Type: Voltage free contacts (relays).
CONTACTS OUTPUT can be set as max or min alarm contacts associated to any measured parameter, or as active energy (EP+) and reactive energy (EQL) pulses. They also can be set as contacts operated from the central unit.

DISPLAY LED

- 3 LED displays(4 digits + sign).
- Height of digits: 12,5 mm.
- Built in keypad (5 Keys).
- 7 selectable parameters for each display.
- Over 30 measuring parameters.

MAX. AND MIN. VALUES

- Max. and min. values of: V_1, V_2, V_3,V_{12}, V_{23}, V_{31}, I_1, I_2, I_3, P_1, P_2, P_3, P, Q, S, cos φ, and Hz.

4 DIGITAL INPUTS

The digital inputs can operate to:

- Signal the position of contacts or alarms.
- Indicate energy consumption for external processes and synchronisation pulse for the maximun demand function.
- Pulse totalizer for external instruments.

TECHNICAL ESPECIFICATIONS

INPUT

Rated voltage (Un)	100, 110, 230 or 400 V
Burden	1 mA per phase
Operating range	20-120 % Un
Rated voltage(In)	1 or 5 A
Burden	0,2 VA per phase
Operating range	1- 120 % In
Frecuency	50-60 Hz

CONTACTS OUTPUT

Number of outputs	2
Type	N.O. relay 250 V, 8 A

ACCURACY

Parameter	Operating range	Accuracy
Voltage	20-120 %	0,2%(read.+ full scale)
Current	1-120%	0,2%(read.+ full scale)
Active power	1-120%	0,2%(read.+ full scale)
Reactive power	1-120%	0,2%(read.+ full scale)
Apparent power	1-120%	0,4%(read.+ full scale)
Power factor	-0,5/+0,5	0,4%(read.)
Frecuency	45-65 Hz	0,2% (rated freq.)
Active energy	5-120%	1% read.
Reactive energy	5-120%	2% read.

SERIAL PORT

Type	RS485
Connection	2 or 4 wire
Baud rate	Programmable
Baud rate (standard)	9600 bauds
Max. Nº. of instruments per line	32
Max. lengh of system per line (without amplifier)	1250 m
(On request, RS232 serial port)	

AUXILIARY VOLTAGE

A. C. Aux. V	63,5, 110, 230 or 400 V
Burden	6 VA
Operating range	80-120 % Un

GENERAL FEATURES

Case material	ABS, UL94 V0
Dimensions	DIN 96 x 96 mm
Terminals	Pluggable
Max. wire diameter	2,5 mm^2
Weight	0,75 kg
Protection	IP54 (Front) IP20 (Terminals)
Electrical safety (EN 61010)	Class 2 Category III

ACCESSORIES

x/5 A o x/1 A transformers
RS232 / RS485 converters
RS485 amplifiers

OPTIONAL

Reading software (without additional cost).
Management software SACIgest

CONNECTIONS

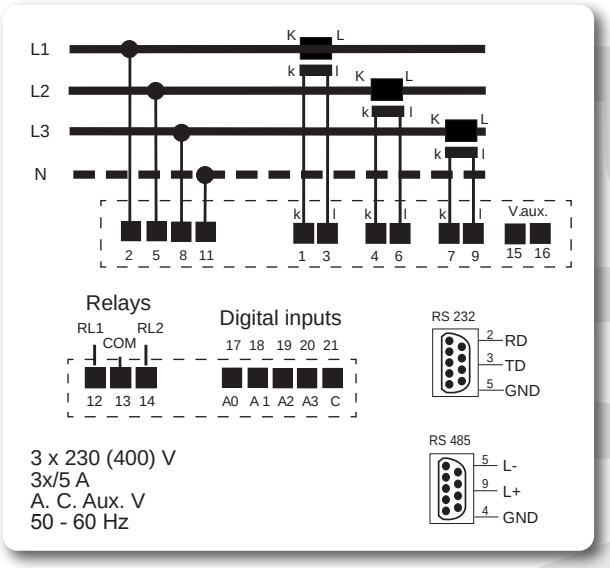

NETWORK ANALYZER - MAR 144

Instrument with microprocessor, programmable, with three LED display indicating measurements and built-in keypad.

- **DIN 144 x 144 INSTRUMENT**
- **MEASUREMENT IN 4 QUADRANTS**
- **THREE-PHASE, 4-WIRE**
- **MAX. and MIN. VALUES**
- **TRUE EFFECTIVE VALUE (RMS)**
- **RS232 / RS485 SERIAL PORTS**
- **2 CONTACTS OUTPUT**

MEASURING ENVIRONMENT

ELECTRICAL PARAMETER	Symbol	L1	L2	L3	SYSTEM
Voltage (Line-to-Neutral)	V	●	●	●	
Voltage (Line-to-Line)	V	●	●	●	
Current	A	●	●	●	
Active power (P)	kW	●	●	●	●
Reactive power (Q)	kVAr	(*)	(*)	(*)	●
Apparent power (S)	kVA	(*)	(*)	(*)	(*)
Power factor (cos φ)	PF	(*)	(*)	(*)	●
Frecuency	Hz				●
Consumed active energy (EP+)	kW-h				●
Generated active energy (EP-)	kW-h				●
Consumed inductive reactive energy (EQC+)	kvar-h				●
Consumed capacitive reactive energy (EQC-)	kvar-h				●

(*) Via serial port only

MODEL

- **MAR144-B** Basic model
- **MAR144-BA** Basic model
  Current insulated
- **MAR144** Single-phase
- **MAR144-I** Three-phase, 3 wire, balanced
- **MAR144-II** Three-phase, 3 wire, unbalanced
- **MAR144-3** Three-phase, 4 wire, unbalanced
  Current insulated
  2 relays
  Burden insulated (optional)

SETTING

- Instrument identity code.
- VT Ratio.
- CT Ratio.
- Contacts operating mode.

SERIAL PORT

- Type: RS485
- Protocol MODBUS RTU
- Baud rate Programmable
  300 – 19200 bauds
  Standard 9600 bauds

CONTACTS OUTPUT

Type: Voltage free contacts (relays).
CONTACTS OUTPUT can be set as max or min alarm contacts associated to any measured parameter, or as active energy (EP+) and reactive energy (EQL) pulses. They also can be set as contacts operated from the central unit.

DISPLAY LED

- 3 LED displays (4 digits + sign).
- Height of digits: 14,5 mm.
- Built in keypad (5 Keys).
- 7 selectable parameters for each display.
- Over 30 measuring parameters.

MAX. AND MIN. VALUES

- Max. and min. values of: V_1, V_2, V_3,V_{12}, V_{23}, V_{31}, I_1, I_2, I_3, P_1, P_2, P_3, P, Q, S, cos φ, and Hz.

4 DIGITAL INPUTS (Optional)

The digital inputs can operate to:

- Signal the position of contacts or alarms.
- Indicate energy consumption for external processes and synchronisation pulse for the maximun demand function.
- Pulse totalizer for external instruments.

DIGITAL OUTPUTS (Optional)

10 independent programmable relays, for assigning variables and alarm setting.

ANALOGUE OUTPUT (Optional)*

Number of outputs:	1
Type:	4-20 mA
Operating range	programmable

(*) Voltage isolation needed

TECHNICAL ESPECIFICATIONS

INPUT

Rated voltage (Un)	100, 110, 230 or 400 V
Burden	1 mA per phase
Operating range	20-120 % Un
Rated voltage(In)	1 or 5 A
Burden	0,2 VA per phase
Operating range	1- 120 % In
Frecuency	50 or 60 Hz

ACCURACY

Parameter	Operating range	Accuracy
Voltage	20-120 %	0,2%(read.+ full scale)
Current	1-120%	0,2%(read.+ full scale)
Active power	1-120%	0,2%(read.+ full scale)
Reactive power	1-120%	0,2%(read.+ full scale)
Apparent power	1-120%	0,4%(read.+ full scale)
Power factor	-0,5/+0,5	0,4%(read.)
Frecuency	45-65 Hz	0,2% (rated freq.)
Active energy	5-120%	1% read.
Reactive energy	5-120%	2% read.

CONTACTS OUTPUT

Number of outputs	2
Type	N.O. relay, 250 V, 3 A

SERIAL PORT (OPTIONAL)

Type	RS485
Connection	2 or 4 wire
Baud rate	Programmable
Baud rate (standard)	9600 bauds
Max. Nº. of instruments per line	32
Max. lengh of system per line (without amplifier)	1250 m

(On request, RS232 serial port)

AUXILIARY VOLTAGE

- A. C. Aux. V	63,5/110 V or 230/400 V
Burden	6 VA
Operating range	70-120 % Un
- D.C. Aux. V	95-300 V or 18-72 V
Burden	3 W

GENERAL FEATURES

Case material	Metal+ABS, UL94 V0
Dimensions	DIN 144 x 144 mm
Terminals	Pluggable
Max. wire diameter	2,5 mm^2
WEIGHT	0,75 kg
Protection	IP54 (Front), IP20 (Terminals)
Electrical safety (EN 61010)	Class 2
	Category III

ACCESSORIES

x/5 A o x/1 A transformers
RS232 / RS485 converters
RS485 amplifiers

OPTIONAL

Reading software (without additional cost).
Management software SACIgest

CONNECTIONS

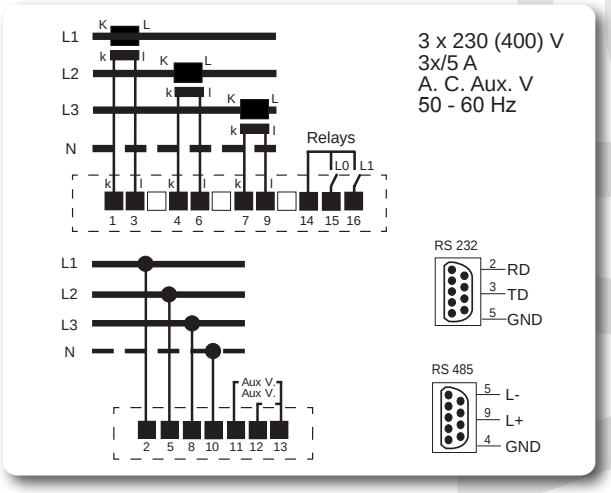

NETWORK ANALYZER - MDA 96

Instrument with microprocessor, programmable, with three LED display indicating measurements and built-in keypad.

- **DIN 96 x 96 INSTRUMENT**
- **MEASUREMENT IN 4 QUADRANTS**
- **THREE-PHASE, 4-WIRE**
- **NEUTRAL CURRENT**
- **HARMONIC DISTORTION (THD V and I)**
- **MAXIMUM DEMAND, A, kW, kVA, kvar**
- **MAX. and MIN. VALUES**
- **TRUE EFFECTIVE VALUE (RMS)**
- **RS232 / RS485 SERIAL PORTS**
- **2 CONTACTS OUTPUT**

MEASURING ENVIRONMENT

ELECTRICAL PARAMETER	Symbol	L1	L2	L3	SYSTEM
Voltage (Line-to-Neutral)	V	●	●	●	
Voltage (Line-to-Line)	V	●	●	●	
Neutral current	A				●
Current	A	●	●	●	
Active power (P)	kW	●	●	●	●
Reactive power (Q)	kVAr	●	●	●	●
Apparent power (S)	kVA	●	●	●	●
Power factor (cos φ)	PF	●	●	●	●
Maximum demand (Current)	A	●	●	●	
Maximum demand (P)	kW				●
Maximum demand (Q)	kVAr				●
Maximum demand (S)	kVA				●
Frecuency	Hz				●
THD Current	A	●	●	●	
THD Voltage	V	●	●	●	
Consumed active energy (EP+)	kW-h				●
Generated active energy (EP-)	kW-h				●
Consumed inductive reactive energy (EQC+)	kvar-h				●
Consumed capacitive reactive energy (EQC-)	kvar-h				●

MODEL

- **MDA96-BA** Basic model
  Current insulated
- **MDA96-C** Current insulated
  RS485 Serial port
  2 relays

CONTACTS OUTPUT

Type: Voltage free contacts (relays).
CONTACTS OUTPUT can be set as max or min alarm contacts associated to any measured parameter, or as active energy (EP+) and reactive energy (EQL) pulses. They also can be set as contacts operated from the central unit.

SETTING

- Instrument identity code.
- VT Ratio.
- CT Ratio.
- Contacts operating mode.

MAXIMUM DEMAND FUNCTION

- Average values of I1, I2, I3, P, Q and S.
- Integration period: 15 or 30 minutes.
- These values can be displayed as current average values and saved as maimums.

SERIAL PORT

- Type:	RS485
- Protocol	MODBUS RTU
- Baud rate	Programmable 300 – 19200 bauds Standard 9600 bauds

DISPLAY LED

- 3 Displays LED (4 digits + sign).
- Height of digits: 12,5 mm.
- Built in keypad (5 Keys).
- 6 selectable parameters for each display.
- Up to 83 measuring parameters.

MAX. AND MIN. VALUES

- Max. and min. values of: V_1, V_2, V_3,V_{12}, V_{23}, V_{31}, I_1, I_2, I_3, P_1, P_2, P_3, P, Q, S, cos φ, and Hz.

TECHNICAL ESPECIFICATIONS

INPUT

4-phase wire, unbalanced.

Rated voltage (Un)	100, 110, 230 or 400 V
Burden	1 mA per phase
Operating range	20-120 % Un
Rated voltage(In)	1 or 5 A
Burden	0,2 VA per phase
Operating range	1- 120 % In
Frecuency	50 or 60 Hz

CONTACTS OUTPUT

Number of outputs	2
Type	N.O. relay 250 V, 3 A

SERIAL PORT

Type	RS485
Connection	2 wire
Baud rate	Programmable
Baud rate (standard)	9600 bauds
Max. Nº. of instruments per line	32
Max. lengh of system per line (without amplifier)	1250 m

(On request, RS232 serial port)

ACCURACY

Parameter	Operating range	Accuracy
Voltage	20-120 %	0,3%(read.+ full scale)
Current	1-120%	0,3%(read.+ full scale)
Active power	1-120%	0,3%(read.+ full scale)
Reactive power	1-120%	0,3%(read.+ full scale)
Apparent power	1-120%	0,5%(read.+ full scale)
Power factor	-0,5/+0,5	0,6%(read.)
Frecuency	45-65 Hz	0,2% (rated freq.)
Active energy	5-120%	1% read.
Reactive energy	5-120%	2% read.

AUXILIARY VOLTAGE

- A. C. Aux. V	63,5/110 V or 230/400 V
Burden	3 VA
Operating range	70-120 % Un
- D.C. Aux. V	18-72 V
Burden	3 W
- UNIVERSAL	85-264 V A.C.; 90-300 V D.C.
Burden	4 VA

GENERAL FEATURES

Case material	Metal+ABS, UL94 V0
Dimensions	DIN 96 x 96 mm
Terminals	Pluggable
Max. wire diameter	2,5 mm^2
WEIGHT	0,75 kg
Protection	IP54 (Front) IP20 (Terminals)
Electrical safety (EN 61010)	Class 2 Category III

ACCESSORIES

x/5 A or x/1 A transformers
RS232 / RS485 converters
RS485 amplifiers

OPTIONAL

Reading software (without additional cost).
Management software SACIgest

CONNECTIONS

3 x 230 (400) V
3x/5 A
A. C. Aux. V
50 - 60 Hz

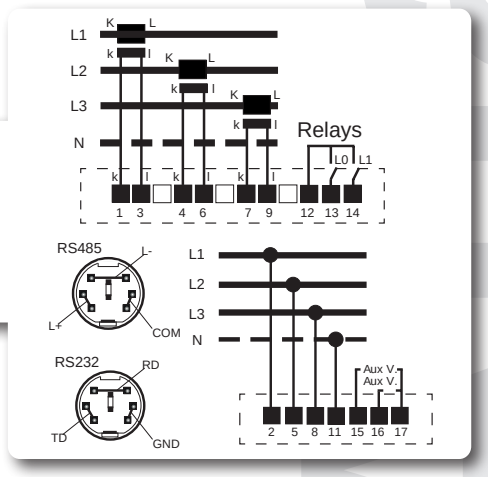

NETWORK ANALYZER - MDA 144

Instrument with microprocessor, programmable, with three LED display indicating measurements and built-in keypad.

- **DIN 144 x 144 INSTRUMENT**
- **MEASUREMENT IN 4 QUADRANTS**
- **THREE-PHASE, 4-WIRE**
- **NEUTRAL CURRENT**
- **HARMONIC DISTORTION (THD V and I)**
- **MAXIMUM DEMAND, A, kW, kVA, kvar**
- **MAX. and MIN. VALUES**
- **TRUE EFFECTIVE VALUE (RMS)**
- **CURRENT INSULATED**
- **RS232 / RS485 SERIAL PORTS**
- **2 CONTACTS OUTPUT**

MEASURING ENVIRONMENT

ELECTRICAL PARAMETER	Symbol	L1	L2	L3	SYSTEM
Voltage (Line-to-Neutral)	V	●	●	●	
Voltage (Line-to-Line)	V	●	●	●	
Neutral current	A				●
Current	A	●	●	●	
Active power (P)	kW	●	●	●	●
Reactive power (Q)	kVAr	●	●	●	●
Apparent power (S)	kVA	●	●	●	●
Power factor (cos φ)	PF	●	●	●	●
Maximum demand (Current)	A	●	●	●	
Maximum demand (P)	kW				●
Maximum demand (Q)	kVAr				●
Maximum demand (S)	kVA				●
Frecuency	Hz				●
THD Current	A	●	●	●	
THD Voltage	V	●	●	●	
Consumed active energy (EP+)	kW-h				●
Generated active energy (EP-)	kW-h				●
Consumed inductive reactive energy (EQC+)	kvar-h				●
Consumed capacitive reactive energy (EQC-)	kvar-h				●

MODEL

- **MDA144** — Current insulated
  RS485 Serial port
  2 relays
  Burden insulated (optional)

SETTING

- Instrument identity code.
- VT Ratio.
- CT Ratio.
- Contacts operating mode.

CONTACTS OUTPUT

Type: Voltage free contacts (relays).
CONTACTS OUTPUT can be set as max or min alarm contacts associated to any measured parameter, or as active energy (EP+) and reactive energy (EQL) pulses. They also can be set as contacts operated from the central unit.

MAXIMUM DEMAND FUNCTION

- Average values of I1, I2, I3, P, Q and S.
- Integration period: 15 or 30 minutos.
- These values can be displayed as current average values and saved as maimums.

SERIAL PORT

- Type: RS485
- Protocol MODBUS RTU
- Baud rate Programmable
  300 – 19200 bauds
  Standard 9600 bauds

Optional: Serial port on front (DIN mini conector)

DISPLAY LED

- 3 Displays LED (4 digits + sign).
- Height of digits: 14,5 mm.
- Built in keypad (5 Keys).
- 7 selectable parameters for each display.
- Up to 83 measurig parameters.

MAX. AND MIN. VALUES

- Max. and min. values of: V_1, V_2, V_3,V_{12}, V_{23}, V_{31}, I_1, I_2, I_3, P_1, P_2, P_3, P, Q, S, cos φ, and Hz.

4 DIGITAL INPUTS

The digital inputs can operate to:
- Signal the position of contacts or alarms.
- Indicate energy consumption for external processes and synchronisation pulse for the maximum demand function
- Pulse totalizer for external instruments.

DIGITAL OUTPUTS

10 independent programmable relays, for assigning variables and alarm setting.

ANALOGUE OUTPUT*

Number of outputs: 1
Type: 4-20 mA
Magnitud de medida: programmable
(*) Voltage isolation needed

TECHNICAL ESPECIFICATIONS

INPUT

4-phase wire, unbalanced.
Rated voltage (Un) 100, 110, 230 or 400 V
Burden 1 mA per phase
Operating range 20-120 % Un
Rated voltage(In) 1 or 5 A
Burden 0,2 VA per phase
Operating range 1- 120 % In
Frecuency 50 or 60 Hz

OPTIONAL

Reading software (without additional cost).
Management software SACIgest

CONTACTS OUTPUT

Number of outputs 2
Type N.O. relay
250 V, 3 A

ACCURACY

Parameter	Operating range	Accuracy
Voltage	20-120 %	0,2%(read.+ full scale)
Current	1-120%	0,2%(read.+ full scale)
Active power	1-120%	0,2%(read.+ full scale)
Reactive power	1-120%	0,2%(read.+ full scale)
Apparent power	1-120%	0,4%(read.+ full scale)
Power factor	-0,5/+0,5	0,4%(read.)
Frecuency	45-65 Hz	0,2% (rated freq.)
Active energy	5-120%	1% read.
Reactive energy	5-120%	2% read.

SERIAL PORT

Type RS485
Connection 2 or 4 wire
Baud rate Programmable
Baud rate (standard) 9600 bauds
Max. No. of instruments per line 32
Max. lengh of system per line (without amplifier) 1250 m
(On request, RS232 serial port)

AUXILIARY VOLTAGE

- A. C. Aux. V 63,5/110 V or 230/400 V
  Burden 3 VA
  Operating range 70-120 % Un
- D.C. Aux. V 90-300 V or 18-72 V
  Burden 3 W

GENERAL FEATURES

Case material Metal+ABS, UL94 V0
Dimensions DIN 144 x 144 mm
Terminals Pluggable
Max. wire diameter 2,5 mm^2
WEIGHT 0,75 kg
Protection IP54 (Front)
IP20 (Terminals)

Electrical safety (EN 61010) Class 2
Category III

ACCESSORIES

x/5 A or x/1 A transformers
RS232 / RS485 converters
RS485 amplifiers

CONNECTIONS

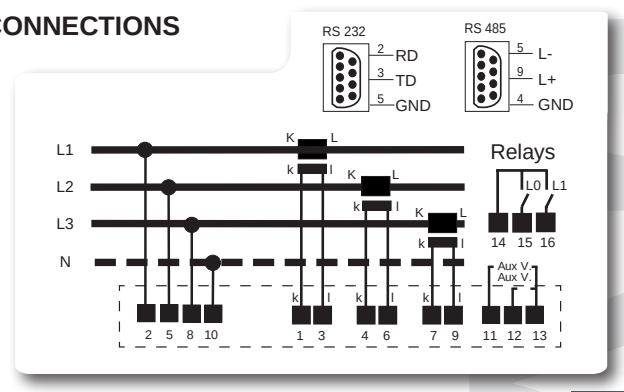

NETWORK ANALYZER - TCEM

Programmable instrument with microprocessor.

- **DIN RAIL MOUNTING**
- **LED DISPLAY**
- **MEASUREMENT IN 4 QUADRANTS**
- **TRUE EFFECTIVE VALUE (RMS)**
- **CURRENT INSULATED**
- **RS232 / RS485 SERIAL PORTS**
- **1 CONTACT OUTPUT**

MEASURING ENVIRONMENT

ELECTRICAL PARAMETER	Symbol	L1	L2	L3	SYSTEM
Voltage (Line-to-Neutral)	V	●	●	●	
Voltage (Line-to-Line)	V	●	●	●	
Current	A	●	●	●	●
Active power (P)	kW	●	●	●	●
Reactive power (Q)	kVAr	●	●	●	●
Apparent power (S)	kVA	●	●	●	●
Power factor (cos φ)	PF				●
Frecuency	Hz				●
Consumed active energy (EP+)	kW-h				●
Generated active energy (EP-)	kW-h				●
Consumed inductive reactive energy (EQC+)	kvar-h				●
Consumed capacitive reactive energy (EQC-)	kvar-h				●

MODEL

- TCEM	Single-phase
- TCEM-I	Three-phase, 3 wire, balanced
- TCEM-II	Three-phase, 3 wire, unbalanced
- TCEM-3	Three-phase, 4 wire, unbalanced

SETTING

- Instrument identity code.
- VT Ratio.
- CT Ratio.
- Contacts operating mode.

SERIAL PORT

- Type:	RS485
- Protocol	MODBUS RTU
- Baud rate	9600 bauds

CONTACTS OUTPUT

Type: Voltage-free contact (optocoupler).
Contact output can be set as pulse for active energy (EP+).
It also can be set as contact operated from the central unit.

4 DIGITAL OUTPUTS

The digital inputs can operate to:

Signal the position of contacts or alarms.
- Indicate energy consumption for external processes and synchronisation pulse for the maximum demand function.
- Pulse totalizer for external instruments.

DISPLAY LED

- LED displays(4 digits + sign).
- Built in keypad.
- 12 consecutively displayed parameters by pressing the rotate button.

TECHNICAL ESPECIFICATIONS

INPUT

Rated voltage (Un)	100, 110, 230 or 400 V
Burden	1 mA per phase
Operating range	20-120 % Un
Rated voltage(In)	1 or 5 A
Burden	0,2 VA per phase
Operating range	1- 120 % In
Frecuency	50 or 60 Hz
Current insulated	

CONTACTS OUTPUT

Number of outputs	1
Type	N.O. Optocoupler 5-48 V D.C.
Pulse length	≥ 100 ms

SERIAL PORT

Type	RS485
Connection	2 or 4 wire
Baud rate (standard)	9600 bauds
Max. Nº. of instruments per line	32
Max. lengh of system per line (without amplifier)	1250 m

(On request, RS232 serial port)

ACCURACY

Parameter	Operating range	Accuracy
Voltage	20-120 %	0,2%(read.+ full scale)
Current	1-120%	0,2%(read.+ full scale)
Active power	1-120%	0,2%(read.+ full scale)
Reactive power	1-120%	0,2%(read.+ full scale)
Apparent power	1-120%	0,4%(read.+ full scale)
Power factor	-0,5/+0,5	0,4%(read.)
Frecuency	45-65 Hz	0,2% (rated freq.)
Active energy	5-120%	1% read.
Reactive energy	5-120%	2% read.

AUXILIARY VOLTAGE

A. C. Aux. V	110, 230, or 400 V
Burden	6 VA
Operating range	80-120 % Un

GENERAL FEATURES

Mounting	Carril DIN
Case material	ABS, UL94 V0
Dimensions	(9 Modules) 155 x 90 mm
Terminals	Pluggable
Max. wire diameter	2,5 mm^2
WEIGHT	0,65 kg
Protection	IP40
Electrical safety (EN 61010)	Class 2 Category III

ACCESSORIES

x/5 A o x/1 A transformers
RS232 / RS485 converters
RS485 amplifiers

OPTIONAL

Reading software (without additional cost).
Management software SACIgest

CONNECTIONS

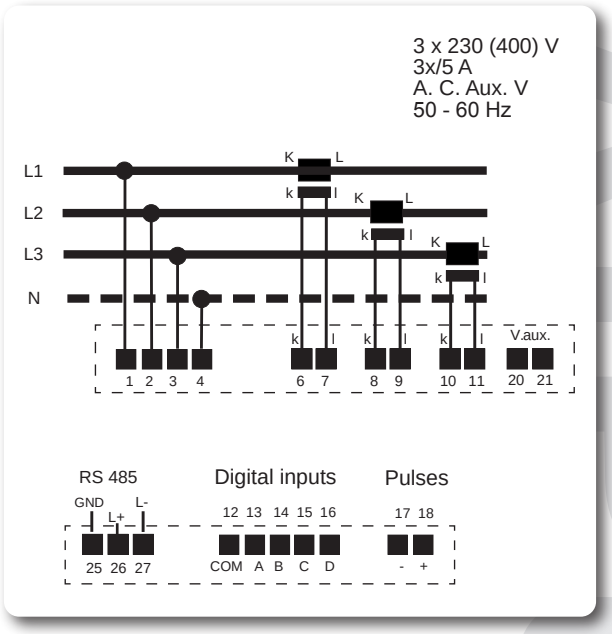

DC. NETWORK ANALYZER - AR3DC

Programmable instrument with microprocessor
and LCD display indicator for measurements

- **DIN MODULAR INSTRUMENT**
- **DC**
- **RS485 SERIAL OUTPUT**
- **VALUE ALTERNATIVE MEASURE EVERY 2 s.**
- **1 CONTACT OUTPUT**

MEASURING ENVIRONMENT

ELECTRICAL PARAMETER D.C.	Symbol
Voltage	V
Current	A
Active power (P)	kW
Consumed active energy (EP+)	Kwh+
Generated active energy (EP-)	kWh-
Ampere time (+)	Ah+
Ampere time (-)	Ah-
Primary nominal current of the shunt	Ip

MODEL

- AR3DC

SETTING

- Identification code of the instrument.
- CT Ratio.
- Contacts operating mode.
- Energy pulse value.

The equipment is set through the serial output

SERIAL PORT

- Type:	RS485
- Protocol	MODBUS RTU
- Baud rate	Optional Standard 9600 bauds

CONTACT OUTPUTS

Type: voltage free contacts. Contact outputs can be set as max. or min. alarm contacts associated to any measured parameter or as active energy (Kwh+) and reactive energy (Kwh-) pulses. They can also be set as contacts managed from the central unit.

LCD DISPLAY

- 1 Display LCD (4 digits + sign).
- Height of digits: 8 mm.
- Up to 8 measuring parameters.

TECHNICAL ESPECIFICATIONS

INPUT

Rated voltage (Un)	12,24 or 48 V D.C.
Burden	< 1 W
Operating range	80-120 % Un
Rated voltage(In)	
Direct connection	10, 20 or 40 A D.C.
Connection to external shunt	50-1000 A/60 mV D.C.
Operating range	1-120 % In

ACCURACY

Parameter	Operating range	Accuracy
Voltage	80-120%	0,5%(read.+ full scale)
Current	1-120%	0,5%(read.+ full scale)
Active power (P)	1-120%	0,5%(read.+ full scale)
Active energy (EP+)	1-120%	1%(read.+ full scale)
Active energy (EP-)	1-120%	1%(read.+ full scale)
Ampere time (+)	1-120%	1%(read.+ full scale)
Ampere time (-)	1-120%	1%(read.+ full scale)

SERIAL PORT

Type	RS485
Connection	2 wire
Baud rate	Optional
Baud rate (standard)	9600 bauds
Max. Nº. of instruments per line	32

CONTACTS OUTPUT

Number of outputs	1
Type	Optoacoplador < 48 V D.C. (24 V D.C. 1 kohm)

AUXILIARY VOLTAGE

- D.C. Aux. V	Self supplied

GENERAL FEATURES

Mounting	Carril DIN
Case material	ABS, UL94 V0
Dimensions	3 Modules DIN (52x90) mm Terminals with screws
Max. wire diameter	16 mm^2
Weight	0,150 kg
Temperature range	0-40º C
Protection	IP54 (Front) IP20 (Terminals)
Electrical safety (EN 61010)	Class 2 Category III

ACCESSORIES

Shunts x/60 mV
RS232 / RS485 converters
RS485 amplifiers

OPTIONAL

Reading software (without additional cost).
Management software SACIgest

CONNECTIONS

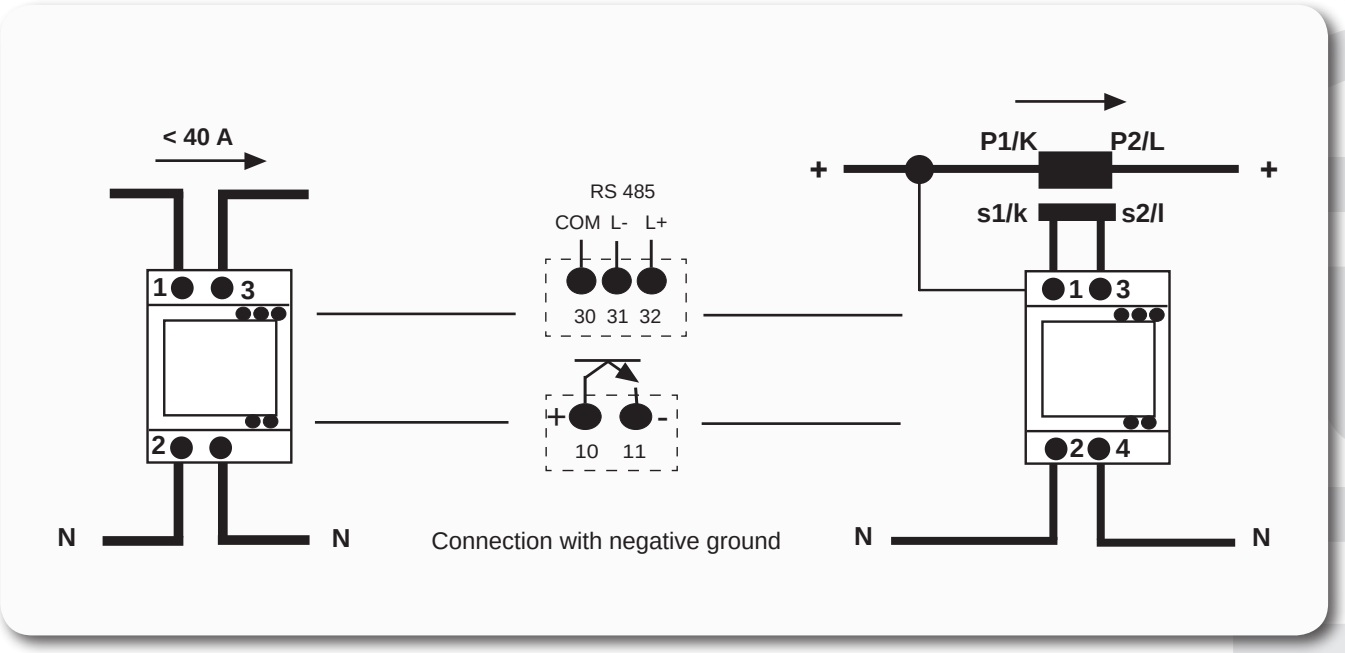

DC. NETWORK ANALYZER - TMCC

Instrument with microprocessor, programmable, with three LED display indicating measurements and built-in keypad.

- **DIN 144 x 144 INSTRUMENT**
- **DIRECT CURRENT**
- **RS232 / RS485 SERIAL PORTS**
- **2 CONTACTS OUTPUT**
- **1 ANALOGUE OUTPUT**

MEASURING ENVIRONMENT

ELECTRICAL PARAMETER D.C.	Symbol
Voltage	**V**
Current	**A**
Active power (P)	**kW**
Active energy (EP+)	**Kwh+**
Active energy (EP-)	**kWh-**
Amperio Hora (+)	**Ah+**
Amperio Hora (-)	**Ah-**
Shunt rated current	**Ip**

MODEL **TMCC**

SETTING

- Instrument identity code.
- VT Ratio.
- CT Ratio.
- Contacts operating mode.
- Energy pulse value.

Setting the device can be by keypad or via the serial port.

SERIAL PORT

- Type:	RS485
- Protocol	MODBUS RTU
- Baud rate	Optional Standard 9600 bauds

ANALOGUE OUTPUT

Number of outputs:	1
Type:	4-20 mA
Accepted measurement:	parameters

CONTACTS OUTPUT

Type: Voltage free contacts (relays).
Contacts output can be set as max or min alarm contacts associated to any measured parameter or as pulses for positive energy (kWh+) and negative energy (kWh-). They also can be set as contacts operated from the central unit.

LED DISPLAY

- 3 LED displays(4 digits + sign).
- Height of digits: 14,5 mm.
- Built in keypad (5 Keys).
- Up to 8 measuring parameters.

TECHNICAL ESPECIFICATIONS

INPUT

Rated voltage (Un)	110, 230 or 400 V D.C.
Burden	1 mA per phase
Operating range	20-120 % Un
Rated voltage(In)	In / 60 mV D.C.
Operating range	1- 120 % In

ACCURACY

Parameter	Operating range	Accuracy
Voltage	20-120%	0,5%(read.+ full scale)
Current	1-120%	0,5%(read.+ full scale)
Active power (P)	1-120%	0,5%(read.+ full scale)
Active energy (EP+)	1-120%	0,5%(read.+ full scale)
Active energy (EP-)	1-120%	0,5%(read.+ full scale)
Amperio Hora (+)	1-120%	0,5%(read.+ full scale)
Amperio Hora (-)	1-120%	0,5%(read.+ full scale)

SERIAL PORT (OPTIONAL)

MODEL	RS485
Connection	2 or 4 wire
Baud rate	Optional
Baud rate (standard)	9600 bauds
Max. Nº. of instruments per line	32

CONTACTS OUTPUT

Number of outputs	2
Type	N.O. relay 250 V, 3 A

AUXILIARY VOLTAGE

A. C. Aux. V	110, 230 or 400 V
Burden	2,8 VA
Operating range	85-110 % Un
Frecuency	50 or 60 Hz

GENERAL FEATURES

Case material	Metal+ABS, UL94 V0
Dimensions	DIN 144 x 144 mm
Fondo	88 mm.
Terminals	Pluggable
Max. wire diameter	2,5 mm^2
Weight	0,72 kg
Operating temperature	0-40º C
Protection	IP54 (Front) IP20 (Terminals)
Electrical safety (EN 61010)	Class 2 Category III

ACCESSORIES

Shunts x/60 mV
RS232 / RS485 converters
RS485 amplifiers

OPTIONAL

Reading software (without additional cost).
Management software SACIgest

CONNECTIONS

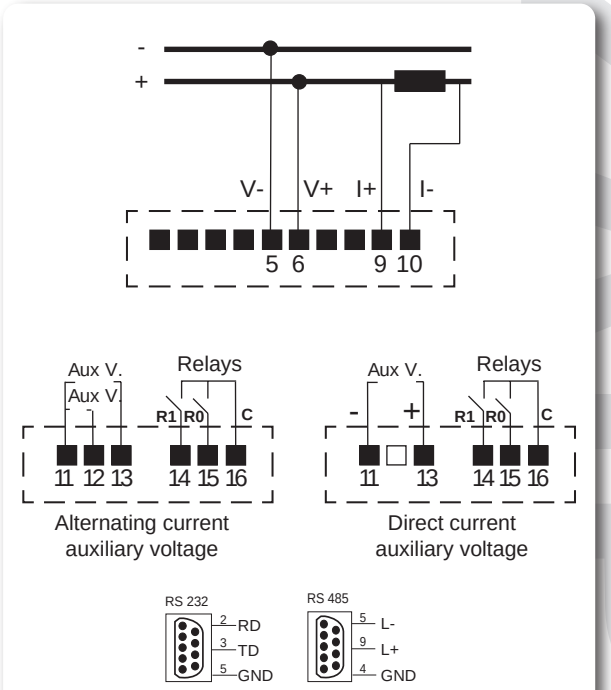

NETWORK QUALITY ANALYZER - TMCQ

Instrument with programmable microprocessor,
with four line LCD display and built-in keypad.

- **DIN 144 x 144 INSTRUMENT**
- **MEASUREMENT OF TRUE EFFECTIVE VALUE OF THE VOLTAGE (RMS)**
- **THREE-PHASE 3 or 4 WIRE**
- **OVERVOLTAGES**
- **UNDERVOLTAGES**
- **DIPS and MICROCUTS**
- **EVENTS RECORDING**
- **RS232 / RS485 SERIAL PORTS**
- **ANALYSIS SOFTWARE**

The TMCQ network quality analyzer detects and records power supply voltage faults in a system as overvoltages or undervoltages, dips and microcuts, which have exceeded the preset limits.

MODEL

- **TMCQ II** Three-phase, 3 wire
- **TMCQ 3** Three-phase, 4 wire

OPERATING MODE

The equipment measures the true effective value of the voltage (RMS) of a three-phase system, taking 128 samples per period. The measured values are compared with the predefined upper and lower values (both programmable). If the values measured are within the preset limits, they are not considered and therefore not recorded. On the other hand, if the predefined limits are exceeded, the detection process begins, the event is classified and measured and once finished, data is saved in a memory powered by a rechargeable battery.

Events contain the following information:

- No.
- Type.
- Phase.
- Date.
- Time.
- Length.
- Maximum or minimum value.
- Average value.

While operating, the equipment displays the following information:

- Voltage per phase.
- Date.
- Time.
- Battery voltage.
- Device identity.

SETTING

- Device identity code.
- Rated voltage.
- VT Ratio.
- Secondary voltage.
- Upper and lower limit values (% of rated value) (Setting software on request).

SERIAL PORT

- Type: RS485 (RS232 optional)
- Connections 2 or 4 Wire
- Protocol MODBUS RTU
- Standard baud rate: 9600 bauds
- Insulation by optocoupler between output and measurement inputs

LCD DISPLAY

- 4 lines, 20 characters.
- Built-in keypad (5 keys).
- Allows recorded data to be displayed.

ROTATING MEMORY

The RAM standard rotating memory allows up to 1360 events to be saved. Data recovery can be via the serial port and MODBUS protocol output or via a SW- Driver in text dBase file format.

TECHNICAL ESPECIFICATIONS

INPUT

Rated voltage (Un)	100,110, 230 or 400 V A.C.
Burden	1 mA per phase
Operating range	0- 150 % Un

Auxiliary voltage
- Self supplied in any of the three phases. (4 wire version)
- Self supplied between phases. (3 wire version)

Burden	< 3VA
Frequency	50 or 60 Hz

GENERAL FEATURES

Case material	Metal+ABS, UL94 V0
Dimensions	DIN 144 x 144 mm
Fondo	88 mm.
Terminals	Pluggable
Max. wire diameter	2,5 mm^2
Weight	0,72 kg
Operating temperature	0-40º C
Protection	IP54 (Front) IP20 (Terminals)
Electrical safety (EN 61010)	Class 2 Category III

ACCESSORIES

RS232 / RS485 converters
RS485 amplifiers

OPTIONAL

Management software SACIgest

CONNECTIONS

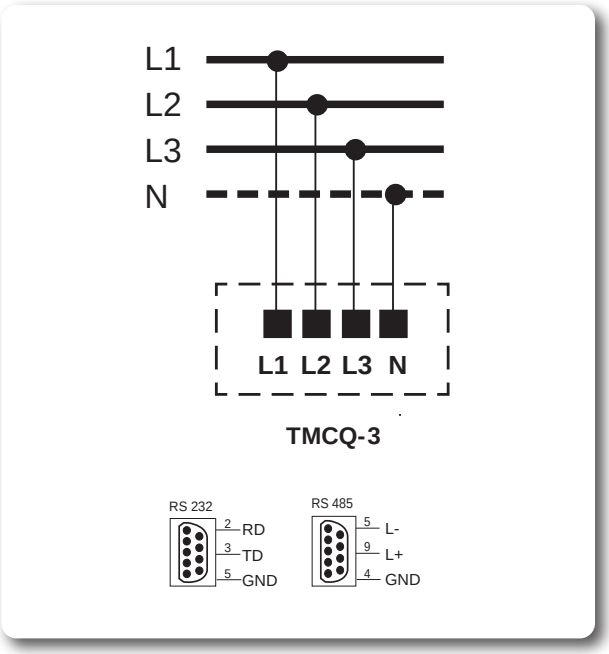

CONNECTIONS

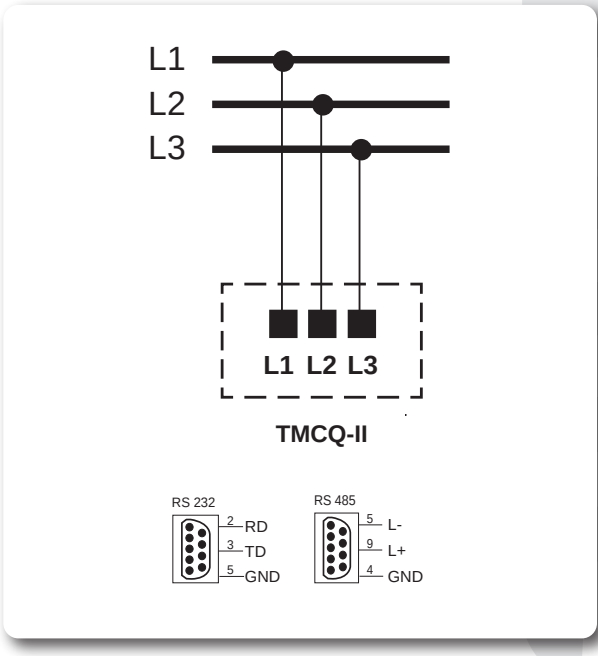

RS232 / RS485 CONVERTERS - IFR

- **DIN RAIL MOUNTING**
- **CONNECTIONS: 2 or 4 WIRE**
- **OPTICAL INSULATION BETWEEN RS232 and RS485 SERIAL PORTS**
- **UP TO 4 RS485 SERIAL PORTS**

IFR equipment converts the RS232 standard levels to the corresponding levels in the RS485 standard.

IFR converters allow a PC with RS232 to be connected to an RS485 bus.

Activating the RS485 drivers can be with RTS, RTS, or automatically if this option has been selected with internal bridges.

For the automatic option, data from the RS232 line activates the drivers.

When data transfer finishes, the IFR converters return to receive mode.

MODEL

- **IFR1**	2 wire 1 output serie RS232 1 RS485 Serial port
- **IFRA3** - **IFRA**	2 or 4 wire Optically insulated 1 output serie RS232 1 RS485 Serial port
- **IFR4**	2 o 4 wire Aislada ópticamente Optically insulated 4 RS485 Serial port

TECHNICAL ESPECIFICATIONS

INPUT

Number of outputs	1
Type	RS232 (RD, TD, RTS, CTS)

OUTPUT

Number of outputs	
IFR1, IFRA	1
IFR4	4
Type	RS485
Baud rate	300-76800 bauds

AUXILIARY VOLTAGE

- A. C. Aux. V	110 or 220 V
Burden	
IFR1	3 VA
IFRA, IFR4	6 VA
- Aux. V D.C. (IFRA only)	24, 48 or 110 V D.C.

GENERAL FEATURES

Case material	ABS, UL94 V0
Dimensions	
IFR1	(3 Modules), 52 x 90 mm
IFRA3	(3 Modules), 52 x 90 mm
IFRA	(6 Modules), 105 x 90 mm
IFR4	(9 Modules), 155 x 90 mm
Terminals	Pluggable
Max. wire diameter	2,5 mm^2
Weight	
IFR1-IFRA3	0,30 kg
IFRA	0,45 kg
IFR4	0,65 kg
Mounting	Carril DIN

CONNECTIONS

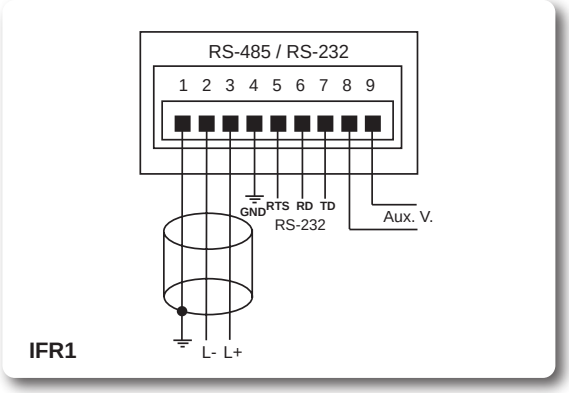

IFR1

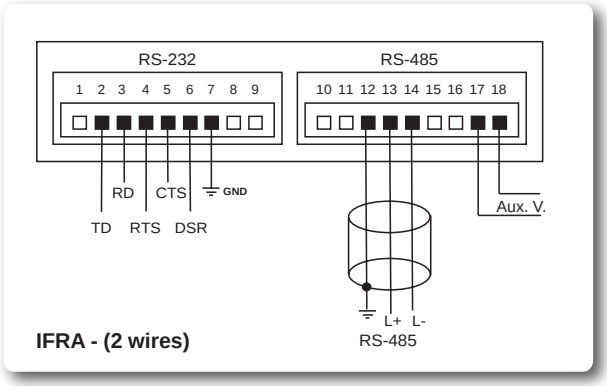

IFRA - (2 wires)

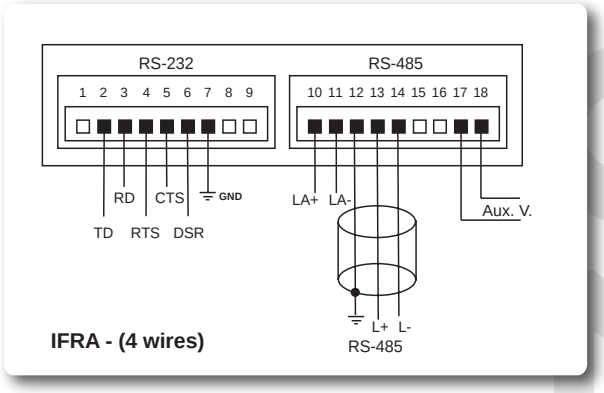

IFRA - (4 wires)

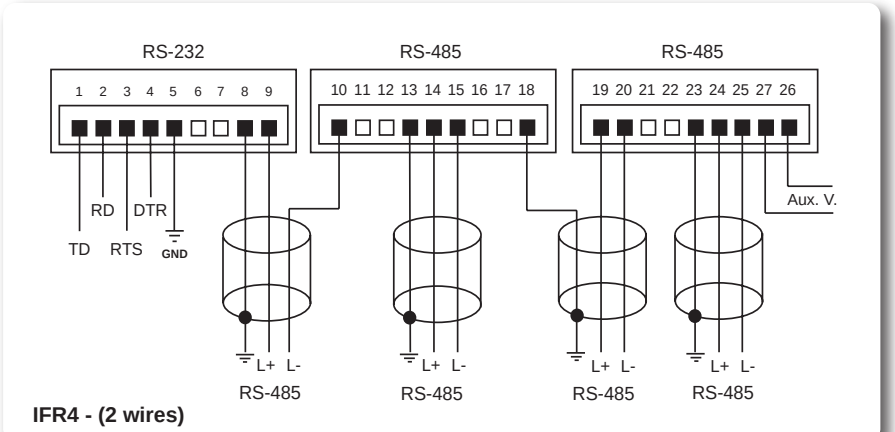

IFR4 - (2 wires)

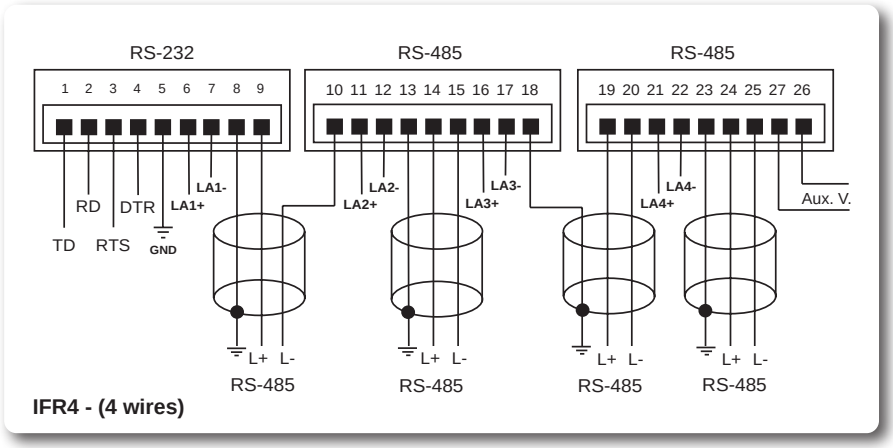

IFR4 - (4 wires)

REPEATER RS485 / RS485 – RT485

- **DIN RAIL MOUNTING**
- **2-WIRE or 4-WIRE**
- **INSULATION BETWEEN BOTH COMMUNICATION BUSES**
- **LEDS FRONTAL DE FUNCIONAMIENTO**

REPEATER RT485 is a communication device that allows the extension of a RS485 bus in order to increase communication distance or the maximum number of recommended terminals.
Communication is received from one of the buses and is sent to the other one, being a bi-directional connection.

MODEL

- RT485	2 or 4 wire

TECHNICAL ESPECIFICATIONS

INPUT

Number of outputs	1
Type	RS485

OUTPUT

Number of outputs	1
Type	RS485
Baud rate	300-19200 bauds

RATED VOLTAGE

- A.C.	110, 220 or 400 V
- D.C.	24, 48, 110 V or 220 V

GENERAL FEATURES

Case material	ABS, UL94 V0
Dimensions	(6 Modules DIN),105x90mm
Terminals	Pluggable
Max. wire diameter	1,5 mm^2
Weight	0,45 kg
Mounting	Carril DIN
LED indication:	RX4: Received data (4 wire) RX2: Received data (2 wire) TX: Sent data

CONNECTIONS

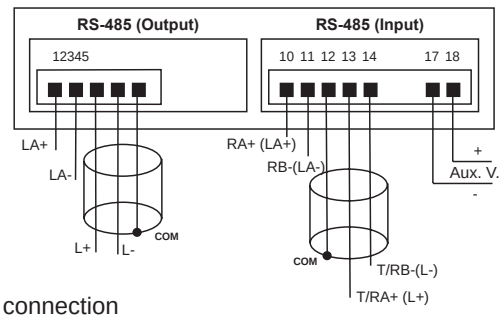

4-wire connection

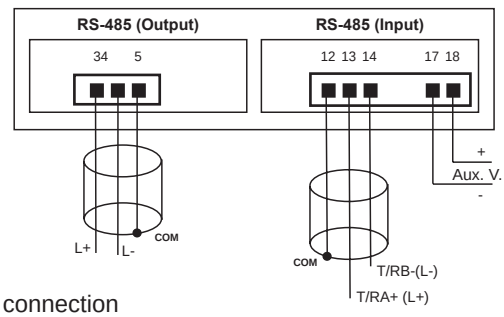

2-wire connection

MANAGEMENT SOFTWARE - SACIGEST

The SACIgest program is a system allowing the SACI terminals installed on the net to be easily managed as graphs. The electrical installation is grouped by sections, each of which is displayed differently, in the way they are inserted in their corresponding terminals.

A variable for each terminal can be monitored on the screen and placed in an appropriate position on the graph.

The system includes the easy creation of virtual terminals based on actual terminals by simply applying a definition formula.

Given the possible inclusion of direct current analyzer terminals, alternating current sections and direct current sections can be created.

Terminal models handling the system are as follows:

MAR, TMC
MDA
LCA_, LDA_, LAB, ANG
TCEM,
CP2000, CP3000, CP4000
TMCQ
M1D, M2D, TCID, TCI, TCIV (*)
TMC-C
TTI
VIRTUAL
(*) Via TTI.

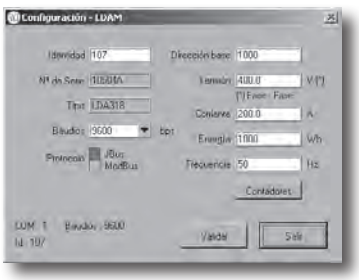

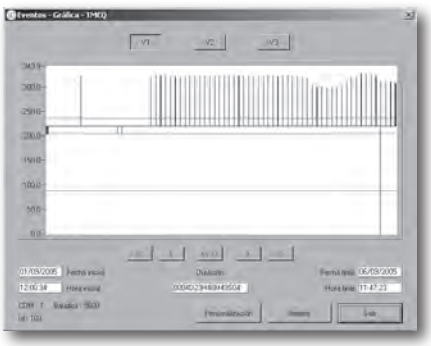

The SACIgest software can work in several languages, initially prepared in Spanish and English. The customer can choose or define his own language.

All definition and setting operations can be password protected. The software is capable of handling up to 4 communication ports (COM1 - COM4), as well as using a modem to communicate with the different terminals installed on the network. The communication speed with the terminals can also be configured (where possible).

The Client - Server operating mode via an Ethernet network can be selected.

Minimum requirements:

CPU: Microprocessor:	Pentium III
RAM:	128 Mb
Video card:	SVGA
Monitor:	Colour, 15” 800 x 600
Software:	MS Windows 98, ME, NT4, 2000 or XP, with Internet Explorer 4.01 or above.

It must also have a serial port for the RS-232 - RS485 converter connection (IFRxx Model) and a serial port for the mouse. It must also have a parallel port for connecting the anti-copying device and a printer.

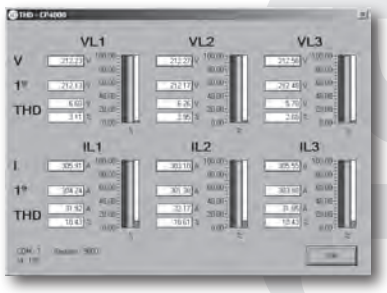

MANAGEMENT SOFTWARE - SACIGEST

Versions

The system has different versions according to its applications:

- SACIgest 01: Version for terminal monitoring and setting options. All terminal parameters can be set and the monitoring data can be accessed. It has a numerical indicator next to the terminal where the value of the selected variable appears.

- SACIgest 02: Version which adds the Energies option to 01. The energy consumption of the instalation can be displayed using the terminals or sections. The values can be shown as a graph. Energy closures can be generated and displayed. Setting of up to 6 types of different tariffs for 12 time periods with holidays defined. The sampling period is programmable by the user in intervals of 5, 10, 15, 20, 30 and 60 minutes based on the PC clock for terminals directly connected to a PC. Also, a different sampling interval can be defined for terminals connected via modem.

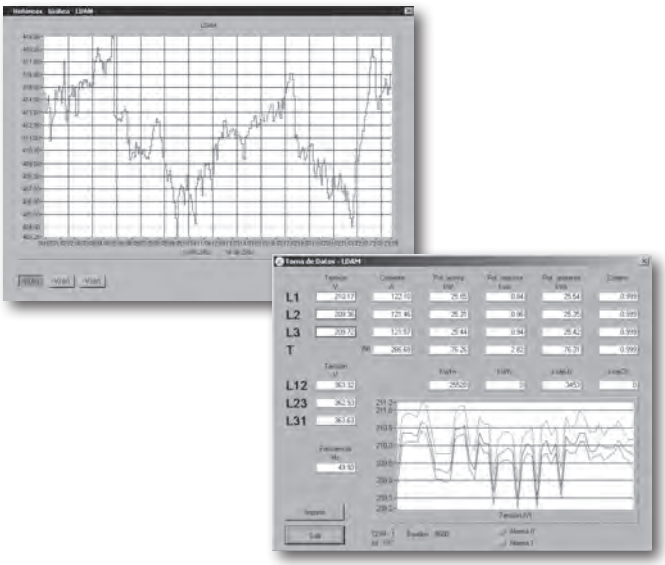

- SACIgest 03: The possibility of having historical values is added to version 02. The voltage, current and power variables are sampled and their historical values are generated. The sampling interval can be defined by the end user. In fact, all parameters are quickly sampled and when it is time to generate the history, the values sampled during the selected interval are averaged.

- SACIgest 04: Alarm option is added to 03. Different alarms on the system can be defined for each terminal allowing actions to be taken on the digital outputs of the terminal or on any other terminal. Pending alarm recordings and already registered alarms are shown. A button on the main screen will indicate if any alarm has been set off.

Sub-versions

Within each SACIgest version there are different subversions which shall be defined below.

- Normal: This is the version for the majority of users. It consists of a single PC connected to the SACI instrument network.

- Server: The SACIgest software can operate in a Client.

- Server environment using an Ethernet interface with NetBios and TCP/IP protocol. This is the Server version which is physically installed in the terminals and provides the service to the clients.

- Client: Within the Client - Server operating mode, this is the client version which accesses the terminals and data allocated on the server. The client version is free, as many clients as required can be installed, but the Server version is required to operate.

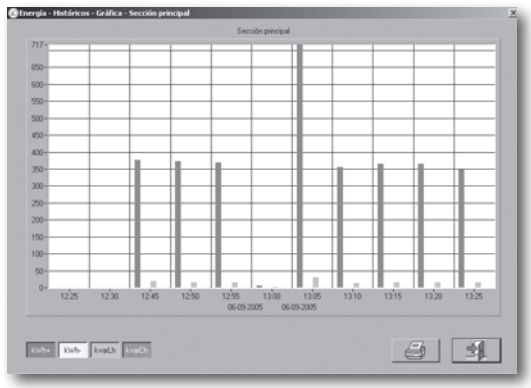

There are also the following installation options for all of the above mentioned versions:

- Normal: This is the normal installation with no limit on terminals.

- Reduced: Same as above, but with a limit of 6 terminals in the installation. The price is also lower.

- Demo: There are completely operational trial versions, which exits after using it for 60 minutes.

All versions, except for the DEMO and Client versions require hardware protection to operate. Each version has its specific protection and it cannot operate without its protection.

The depth of section graph has to be edited by the final user with any graphic design program or with digital photographs.

MANAGEMENT SOFTWARE - SACIGEST

SOFTWARE - LCDA

LCDA software is designed to manage the most common LCA, LCAM, LCC, LCCM, LDA96 and LDA144 versions.

This version can manage different equipment on the network with the option to program the communication speed and to program it via modem. Equipment in the first four communication ports on the PC can be managed.

With this version, the two digital outputs of the instrument, maximums and minimums, harmonics and maximum required values (LDA) can be managed. It takes data for 30 electrical parameters and displays the variables as a graph.

This software version operates on a 32 bit platform, i.e. for Windows 9x, ME, NT4.0, 2000 and XP.

SOFTWARE - LCDAM

LCDAM software is designed to manage the more common versions of LCA, LCAM, LCC, LCCM, LDA96, LDA144 and LDA144 with memory. This version can manage different equipment on the system with the option to set the communication speed and program it via modem. It allows to manage any equipment connected to the first four communication ports on the PC.

With this version, the two digital outputs of the instrument, maximums and minimums, harmonics, maximum required values (LDA and LCC) and the historical values of the LDA144 with memory can be managed. It takes data for 30 electrical parameters and displays the variables as a graph.

SOFTWARE - REMREADER

This is a software for remote readings at a predetermined time of all connected and configured terminals showing their values as a text file. It saves and registers the configuration of the terminals.

RemReader software manages all SACI terminals except for the TMCQ and TTI, although it includes meters connected to the TTI.

The program allows showing the results and the use of a modem to establish communications.

This software version operates on a 32 bit platform, i.e. for Windows 9x, ME, NT4.0, 2000 and XP.

SOFTWARE - MODEMCFG

This software allows to choose the optimal way to properly operate with the network.

Given that two identical modems do not exist and that not all modems accept the same commands, this software has been created to extract the existing configuration in Windows and to reconfigure it. It is easy to assume that the modem has to be installed previously using Windows to allow this configuration software to receive its information.

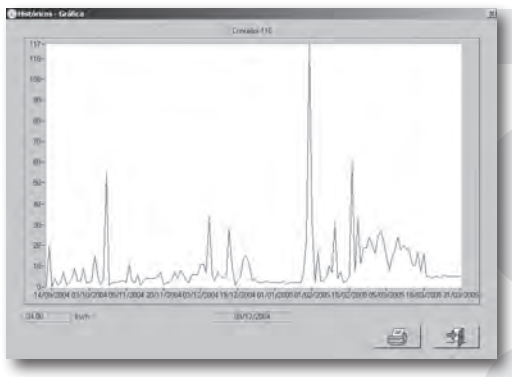

ENERGY METERS

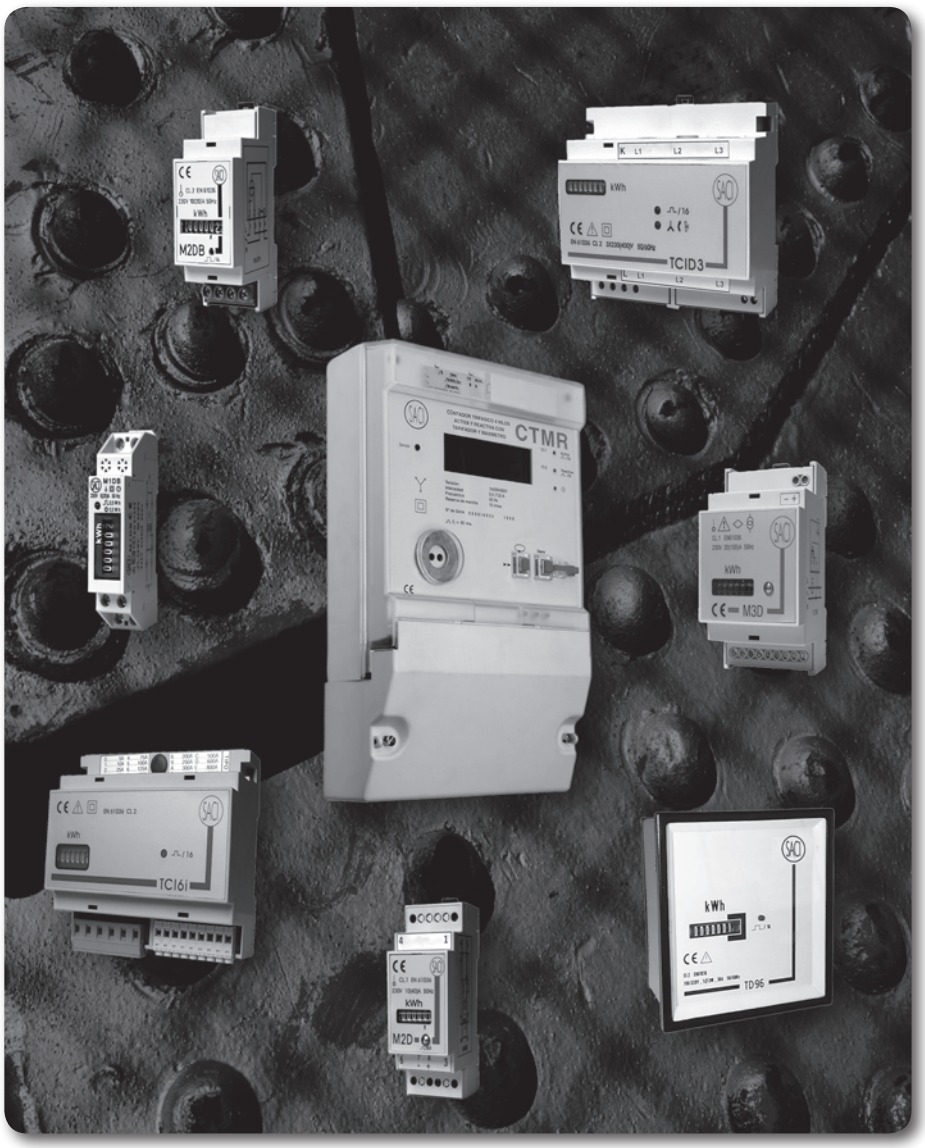

CONTENTS

(*) Other technical specifications, please enquire.

MODULAR - DIN RAIL - SUMMARY

	DIRECT INPUT ENERGY METERS									CT. OPERATED ENERGY METERS							
Type de Red	Single-phase					3-Ph Bal.	3-Phase 4 Wire			3-Phase, 4 W. Balanced			3-Phase			3-Phase 4 Wire	
System Type	Led	Elec.	Led	Electromechanical			Led	Elec.	Led	Electromechanical							
Model	M1DL	M1DM	M2DL	M2DM	TCID	TCIDI	TCIDL	TCID3	TCIL	TCI6-3	TCIV6-3	TCI6i-I	TCIV6i-I	TCI6i-II	TCIV6i-II	TCI6i-3	TCIV6i-3
Active energy	•	•	•	•	•	•	•	•	•	•	•	•	•	•	•	•	•
Reactive energy											•		•		•		•
AC. Voltage	230 V								110-230 or 400 V								
Current In (A)	5 (50)	5 (50)	5 (80)	5 (80)	15 (30) or 30 (90)		5 (80)	20 (60)	x/5A	x/5 or x/1A							
									Rated current input / programmable / selectable								
Accuracy	C.I 1							2	1	Cl. 2 (C.I. 1 on request)							
Nº. of digits	5,2	5,1			6,1		6,2	7	8	6							
LED (Imp/Kwh)	1000				160		10	16 or 160	12000	16							
Burden (VA)	<8				<2,8		<8	<8	<8	<4							
Casings (DIN Modules)	1		2		6		4	6	4								
	PULSE OUTPUT																
Number of outputs (*)	1				1 or 2		1	1 or 2	1	1	2	1	2	1	2	1	2
Pulses/kWh	1				100		10	100 or 1000	1,10 or 100	MODEL 1: 1 Pulse / 1kWh MODEL 2: 1 Pulse / 10kWh							
Tipe	Optocoupler				Opto. Relay		Opto.	Opto. Relay	Opto.	Optocoupler (optional relay)							
Pulse length (**)	>70						>50	>100	>50	>100							

(*) Pulse outputs “1” is Ea+, and “2” is Ea+ and ErL
(**) On request, 300 ms pulse length on TCI6i-3
On request: Bidirectional active energy output on TCI6-3 and TCI6i-3
Other 127 / 220 V or 63.5 / 110 V voltage rated values, please enquire

TECHNICAL SPECIFICATIONS

Operating temperature	-5 to +55 ºC
Storage temperature:	-30 to +70 ºC
Relative humidity	< 90 % without condensation
Insulation	2.5 kV, 1 min.
Reference Standards	IEC 1004-3, IEC 1004-4, IEC 1004-2 EN 50081,EN 50082, IEC255-4

SINGLE-PHASE - DIRECT INPUT - M1DL

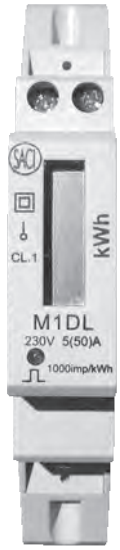

- **Single-phase**
- **Accuracy Cl. 1 (EN 62053)**
- **Direct measurement up to 50 A**
- **Internal Shunt**
- **Energy consumption LED**
- **7 digits electronic counter**
- **Pulse output SO (DIN 43864)**
- **1 DIN module**

TECHNICAL SPECIFICATIONS

VOLTAGE INPUT

Rated voltage (Un)	230 V A.C.
Burden	< 8 VA, 2W
Operating range	± 30 % Un
Frequency	50 or 60 Hz

CURRENT INPUT

Current IB (IMAX)	5 (50) A
Burden	< 1 VA
Operating range	0-100 % IMAX
Starting current (In)	< 0,4 % IB

PULSE OUTPUT (OPTOCOUPLER)

Number of outputs	1
Pulse weight	1000 pulses / kWh
Type	SO (DIN 43864) with external power supply by optocoupler
Insulation	3 kV, 1 min.
Maximum current	50 mA
Voltage	5 - 48 V D.C.
Pulse length	> 70 ms

GENERAL FEATURES

Counter type	LED display
Digits	5 + 2 decimals
Number of counters	1
Accuracy	Class 1 (EN 62053)
Operating temperature from	-20 to +60 ºC
Energy indicator	flashing LED
	1000 pulses per kWh
Case material	ABS, UL94 V0
Dimensions	(1 module) 17,5 mm
Terminals	Sealable
Connection	Terminals with screw
Max. wire diameter	12 mm^2
Mounting	35 mm DIN rail

CONNECTION DIAGRAM

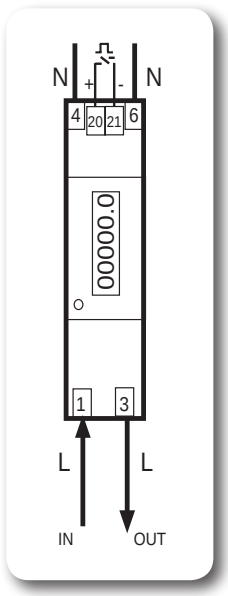

SINGLE-PHASE - DIRECT INPUT - M1DM

- **Single-phase**
- **Accuracy Cl. 1 (EN 62053)**
- **Direct measurement up to 50 A**
- **Internal Shunt**
- **Energy consumption LED**
- **6 digits electromechanical counter**
- **Pulse output SO (DIN 43864)**
- **1 DIN module**

TECHNICAL SPECIFICATIONS

VOLTAGE INPUT

Rated voltage (Un)	230 V A.C.
Burden	< 8 VA, 2W
Operating range	± 30 % Un
Frequency	50 or 60 Hz

CURRENT INPUT

Current IB (IMAX)	5 (50) A
Burden	< 1 VA
Operating range	0-100 % IMAX
Starting current (In)	< 0,4 % IB

PULSE OUTPUT (OPTOCOUPLER)

Number of outputs	1
Pulse weight	1000 pulses / kWh
Type	SO (DIN 43864) with external power supply by optocoupler
Insulation	3 kV, 1 min.
Maximum current	50 mA
Voltage	5 - 48 V D.C.
Pulse length	> 70 ms

GENERAL FEATURES

Counter type	Electromechanical
Digits	5 + 1 decimals
Number of counters	1
Accuracy	Class 1 (EN 62053)
Operating temperature from	-20 to +60 ºC
Energy indicator	flashing LED
	1000 pulses per kWh
Case material	ABS, UL94 V0
Dimensions	(1 module) 17,5 mm
Terminals	Sealable
Connection	Terminals with screw
Max. wire diameter	12 mm²
Mounting	35 mm DIN rail

CONNECTION DIAGRAM

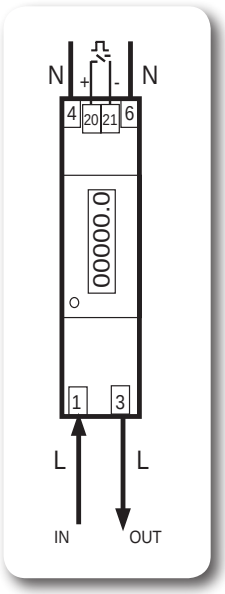

SINGLE PHASE - DIRECT INPUT - M2DL

- **Single-phase**
- **Accuracy Cl. 1 (EN 62053)**
- **Direct measurement up to 80 A**
- **Internal Shunt**
- **Energy consumption LED**
- **6 digits electronic counter**
- **2 Counters (Partial and Total)**
- **Pulse output SO (DIN 43864)**
- **2 DIN module**

TECHNICAL SPECIFICATIONS

VOLTAGE INPUT

Rated voltage (Un)	230 V A.C.
Burden	< 8 VA, 2W
Operating range	± 30 % Un
Frequency	50 or 60 Hz

CURRENT INPUT

Current IB (IMAX)	5 (80) A
Burden	< 1 VA
Operating range	0-100 % IMAX
Starting current (In)	< 0,4 % IB

PULSE OUTPUT (OPTOCOUPLER)

Number of outputs	1
Pulse weight	1000 pulses / kWh
Type	SO (DIN 43864) with external power supply by optocoupler
Insulation	3 kV, 1 min.
Maximum current	50 mA
Voltage	5 - 48 V D.C.
Pulse length	> 70 ms

GENERAL FEATURES

Counter type	LED display
Digits	5 + 1 decimals
Number of counters	1 (total) 1 (partial) with reset to zero
Accuracy	Class 1 (EN 62053)
Operating temperature from	-20 to +60 ºC
Energy indicator	flashing LED 1000 pulses per kWh
Case material	ABS, UL94 V0
Dimensions	(2 module) 35 mm
Terminals	Sealable
Connection	Terminals with screw
Max. wire diameter	
phase input terminals	24 mm²
pulses and neutral terminals	12 mm²
Mounting	35 mm DIN rail

CONNECTION DIAGRAM

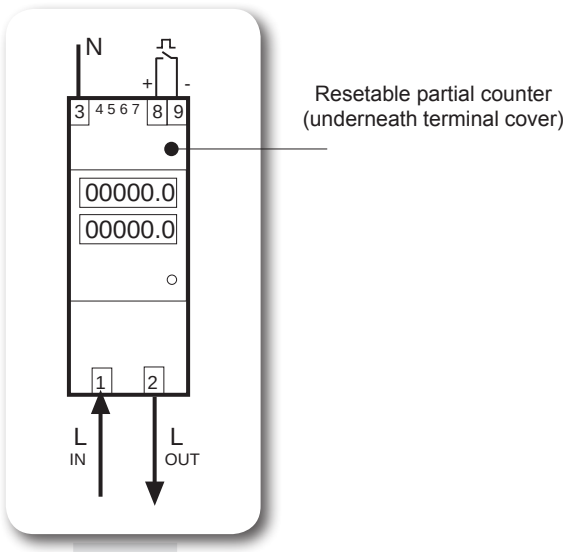

SINGLE PHASE - DIRECT INPUT - M2DM

- **Single-phase**
- **Accuracy Cl. 1 (EN 62053)**
- **Direct measurement up to 80 A**
- **Internal Shunt**
- **Energy consumption LED**
- **6 digits electromechanical counter**
- **Pulse output SO (DIN 43864)**
- **2 DIN module**

TECHNICAL SPECIFICATIONS

VOLTAGE INPUT

Rated voltage (Un)	230 V A.C.
Burden	< 8 VA, 2W
Operating range	± 30 % Un
Frequency	50 or 60 Hz

CURRENT INPUT

Current IB (IMAX)	5 (80) A
Burden	< 1 VA
Operating range	0-100 % IMAX
Starting current (In)	< 0,4 % IB

PULSE OUTPUT (OPTOCOUPLER)

Number of outputs	1
Pulse weight	1000 pulses / kWh
Type	SO (DIN 43864) with external power supply by optocoupler
Insulation	3 kV, 1 min.
Maximum current	50 mA
Voltage	5 - 48 V D.C.
Pulse length	> 70 ms

GENERAL FEATURES

Counter type	Electromechanical
Digits	5 + 1 decimals
Number of counters	1 (total)
Accuracy	Class 1 (EN 62053)
Operating temperature from	-20 to +60 ºC
Energy indicator	flashing LED
	1000 pulses per kWh
Case material	ABS, UL94 V0
Dimensions	(2 module) 35 mm
Terminals	Sealable
Connection	Terminals with screw
Max. wire diameter	
phase input terminals	24 mm^2
pulses and neutral terminals	12 mm^2
Mounting	35 mm DIN rail

CONNECTION DIAGRAM

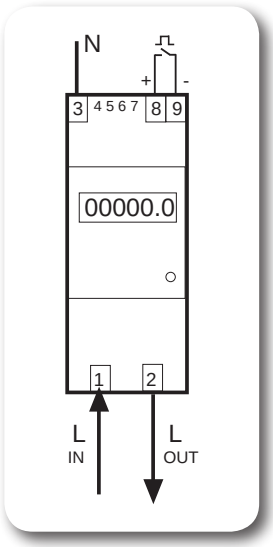

THREE-PHASE - DIRECT INPUT - TCIDL

- **3 or 4-wire Unbalanced 3-phase**
- **Accuracy Cl. 1 (EN 62053)**
- **Direct input up to 80 A**
- **Energy consumption LED**
- **Current checking LED**
- **8 digits electronic counter**
- **Pulse output SO (DIN 43864)**
- **4 DIN module**

TECHNICAL SPECIFICATIONS

VOLTAGE INPUT

Rated voltage (Un)	3x230 (400) V A.C.
Burden	< 8 VA, 2W
Operating range	± 20 % Un
Frequency	50 or 60 Hz

CURRENT INPUT

Current IB (IMAX)	10 (80) A
Burden	< 3 VA
Operating range	0-100 % IMAX
Starting current (In)	< 0,4 % IB

PULSE OUTPUT (OPTOCOUPLER)

Number of outputs	1
Pulse weight	100 pulses / kWh
Type	SO (DIN 43864) with external power supply by optocoupler
Insulation	3 kV, 1 min.
Maximum current	< 20 mA
Voltage	< 24 V D.C.
Pulse length	> 50 ms

GENERAL FEATURES

Counter type	LED display
Digits	6 + 2 decimals
Number of counters	1 (total)
Accuracy	Class 1 (EN 62053)
Operating temperature from	-20 to +60 ºC
Energy indicator	flashing LED 1000 pulses per kWh
Case material	ABS, UL94 V0
Dimensions	(4 module) 70 mm
Terminals	Sealable
Connection	Terminals with screw
Max. wire diameter	
phase input terminals	25 mm²
pulses terminals	2,5 mm²
Mounting	35 mm DIN rail

CONNECTION DIAGRAM

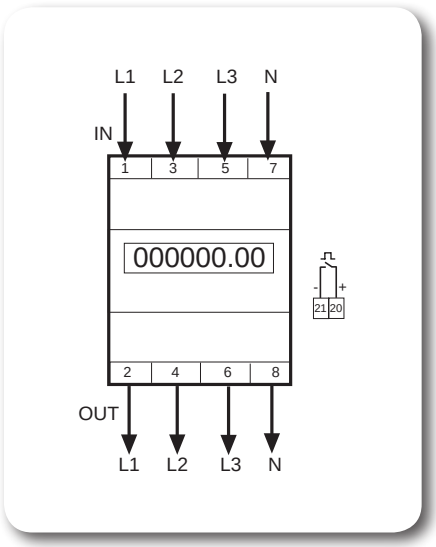

THREE-PHASE - CT OPERATED - TCIL

- **3 or 4-wire Unbalanced 3-phase**
- **Accuracy Cl. 1 (EN 62053)**
- **Programmable indirect input (x/5 A)**
- **Energy consumption LED**
- **Current checking LED**
- **8 digits electronic counter**
- **Pulse output SO (DIN 43864)**
- **4 DIN module**

TECHNICAL SPECIFICATIONS

VOLTAGE INPUT

Rated voltage (Un)	3x230 (400) V A.C.
Burden	< 8 VA, 2W
Operating range	± 20 % Un
Frequency	50 or 60 Hz

CURRENT INPUT

Current IB (IMAX)	1,5 (6) A
Burden	< 3 VA

Primary current:
5,10,15, 25, 30, 40, 50, 60, 75, 80, 100, 120, 150, 200, 250, 300, 400, 500, 600, 750, 1000, 1200, 1500, 1600, 2000, 2500, 3000, 4000, 5000 or 6000/5 A

Operating range	0-100 % IMAX
Starting current (In)	< 0,2 % IB

PULSE OUTPUT (OPTOCOUPLER)

Number of outputs	1
Pulse weight	1, 10 or 100 pulses / kWh
(depending on the relationship of the chosen transformer)	
Type	SO (DIN 43864) with external power supply by optocoupler
Insulation	3 kV, 1 min.
Maximum current	< 20 mA
Voltage	< 24 V D.C.
Pulse length	> 50 ms

GENERAL FEATURES

Counter type	LED display
Digits	8
Decimals	2,1 or 0
(depending on the relationship of the chosen transformer)	
Number of counters	1 (total)
Accuracy	Class 1 (EN 62053)
Operating temperature from	-20 to +60 ºC
Energy indicator	flashing LED 12000 pulses per kWh
Case material	ABS, UL94 V0
Dimensions	(4 module) 70 mm
Terminals	Sealable
Connection	Terminals with screw
Max. wire diameter	
phase input terminals	10 mm²
pulses terminals	2,5 mm²
Mounting	35 mm DIN rail

CONNECTION DIAGRAM

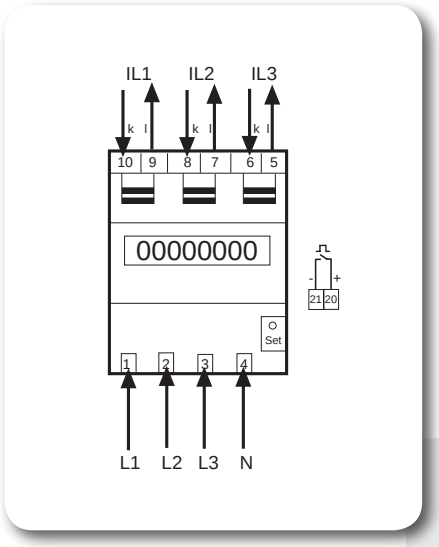

SINGLE-PHASE or THREE-PHASE - DIRECT INPUT - TCID

- **Single-phase or Balanced three-phase**
- **Cl. 1 Accuracy (EN 62053)**
- **Direct measurement up to 90 A**
- **Internal transformer**
- **Energy consumption LED**
- **7 digits electromechanical counter**
- **Pulse output (Optocoupler): SO (DIN 43864)**
- **Relay pulse output (optional)**
- **Optional auxiliary voltage on single-phase model**
- **6 DIN modules**

MODEL

- **TCID**	Single-phase
- **TCIDI**	Balanced three-phase

VOLTAGE INPUT

Rated voltage (Un)	110, 230 or 400 V A.C.
Burden	< 1mA x Un
Operating range	80-120 % Un
	(with auxiliary voltage 0-120 % Un)
Frequency	50 or 60 Hz

CURRENT INPUT

Current IB (IMAX)	15 (30) or 30 (90)A
Burden	< 0,02 VA
Operating range	0-100 % IMAX
Starting current (In)	< 0,4 % IB

AUXILIARY VOLTAGE (SINGLE-PHASE)

Aux. v.	110 V, 230 or 400 V AC
Burden	2,8 VA
Operating range	80-120 % Un

PULSE OUTPUT (OPTOCOUPLER)

Number of outputs	1
Pulse weight	10 pulse / kWh
Type	SO (DIN 43864) with external power supply by optocoupler
Insulation	2,5 kV, 1 min.
Maximum current	50 mA
Voltage	5 - 48 V D.C.
Pulse length	> 30 ms

RELAY PULSE OUTPUT (OPTIONAL)

Number of outputs	1
Pulse weight	10 pulse / kWh
Type	relay contacts 250 V, 3 A
Insulation	2 kV, 1 min.
Pulse length	> 30 ms

GENERAL FEATURES

Accuracy		Class 1
Operating temperature from		0 to + 40 ºC
Energy indicator		Flashing LED
		160 pulse per kWh
Case material		ABS, UL94 V0
Dimensions		(6 modules)105 mm
Conductor primario máx.	15 (30) A	Ø8 mm
	30 (90) A	Ø12 mm
Connection		Terminals with screw
Max. wire diameter		2,5 mm^2
Mounting		35 mm DIN rail

CONNECTION DIAGRAM

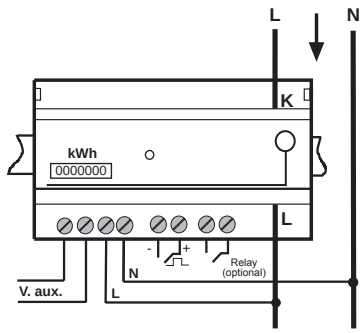

TCID - Single-phase

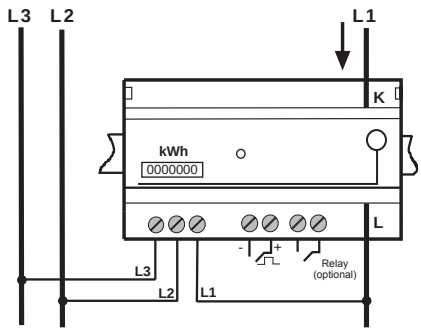

TCIDI - Balanced three-phase e-phase

THREE-PHASE - DIRECT INPUT - TCID3

- **Unbalanced three-phase**
- **Cl. 2 Accuracy (EN 62053)**
- **Direct measurement up to 60 A**
- **Internal transformer**
- **Energy consumption LED**
- **Phase sequence LED**
- **7 digits electromechanical counter**
- **Pulse output (Optocoupler): SO (DIN 43864)**
- **Relay pulse output (optional)**
- **6 DIN modules**

MODEL

- **TCID-3**	Unbalanced three-phase, 3 or 4 wire

TECHNICAL SPECIFICATIONS

VOLTAGE INPUT

Rated voltage (Un)	110, 230 or 400 V A.C.
Burden	< 4 VA (L1-L3)
Operating range	80-120 % Un
Frequency	50 and 60 Hz

CURRENT INPUT

Current IB (IMAX)	20 (60)A
Burden	< 0,02 VA
Operating range	0-100 % IMAX
Starting current (In)	< 0,4 % IB

PULSE OUTPUT (OPTOCOUPLER)

Number of outputs	1
Pulse weight	1 or 0,1 pulse / kWh
Type	SO (DIN 43864) with external power supply
Insulation	by optocoupler 4 kV, 1 min.
Maximum current	50 mA
Voltage	5 - 48 V DC
Pulse length	> 100 ms

RELAY PULSE OUTPUT (OPTIONAL)

Number of outputs	1
Pulse weight	1 pulse / kWh
Type	relay contacts 250 V, 3 A
Insulation	4 kV, 1 min.
Pulse length	> 100 ms

GENERAL FEATURES

Accuracy	Class 2
Operating temperature from	0 to + 40 ºC
Energy indicator	Flashing LED 16 or 160 pulse per kwh
Case material	ABS, UL94 V0
Dimensions	(6 modules) 105 mm
Conductor primario máx.	Ø10 mm
Connection	Terminals with screw
Max. wire diameter	2,5 mm²
Mounting	35 mm DIN rail

CONNECTION DIAGRAM

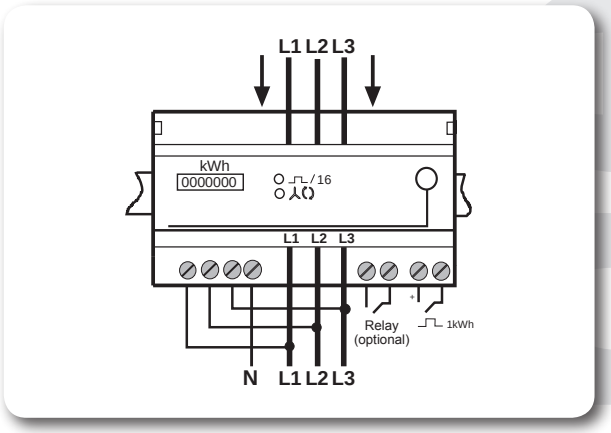

THREE-PHASE - CT OPERATED
TCI6i – TCIV6i – TCIV6iDT

- **Balanced or unbalanced three-phase**
- **Active energy or Active energy + Reactive energy**
- **Cl. 2 Accuracy (EN 62053)**
- **Insulated current (internal transformers)**
- **On request, Cl. 1 (optional)**
- **Selectable primary current**
- **Energy consumption LED**
- **6 digits electromechanical counter**
- **Pulse output (Optocoupler): SO (DIN 43864)**
- **6 DIN modules**

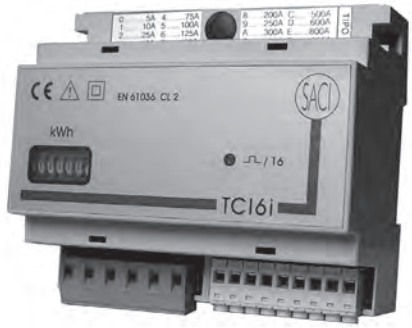

ACTIVE ENERGY	MODEL
Three-phase, balanced, 3 or 4 wire	TCI6i-I
Three-phase, unbalanced, 3 wire	TCI6i-II
Three-phase, unbalanced, 4 wire	TCI6i-3
ACTIVE ENERGY+REACTIVE ENERGY	**MODEL**
Three-phase, balanced, 3 or 4 wire	TCIV6i-I
Three-phase, unbalanced, 3 wire	TCIV6i-II
Three-phase, unbalanced, 4 wire	TCIV6i-3
ACTIVE ENERGY, DOUBLE TARIFF	**MODEL**
Three-phase, unbalanced, 4 wire	TCIV6i-3DT

TECHNICAL SPECIFICATIONS

VOLTAGE INPUT

Rated voltage (Un)	110, 230 or 400 V A.C.
Burden	< 2,8 VA (L1-L3)
	< 1mA x Un (on measuring)
Operating range	80-120 % Un
Frequency	50 and 60 Hz

CURRENT INPUT

Current IB (IMAX)	X/1 or X/5 A
Burden	< 0,2 VA
Operating range	0-120 % IB
Starting current (In)	1 % IB

VERSIONS

- TYPE 1.
- Primary current: 5, 10, 25, 50, 75, 100, 125, 150, 200, 250, 300, 400, 500, 600, 800 or 1000 A.

- TYPE 2.
- Primary current: 300, 400, 500, 600, 750, 800, 1000, 1200,1250, 1500, 1600, 2000, 2500, 3000, 4000 or 5000 A.

PULSE OUTPUT (OPTOCOUPLER)

Number of outputs TCI...		1
	TCIV...	2
Pulse weight	Version 1	1 pulse / kWh
	Version 2	1 pulse / 10 kWh
Type		SO (DIN 43864)
		with external power supply
		by optocoupler
Insulation		4 kV, 1 min.
Maximum current		50 mA
Voltage		5 - 48 V D.C.
Pulse length		> 100 ms
		Optional: > 300 ms

RELAY PULSE OUTPUT (OPTIONAL)

Number of outputs	TCI...	1
	TCIV...	2
Pulse weight	Version 1	1 pulse / kWh
	Version 2	1 pulse/ 10kWh
TYPE		Relay contacts
		250 V, 3 A,100 VA
Insulation		2 kV, 1 min.
Pulse length		> 100 ms
		Optional: > 300 ms

GENERAL FEATURES

Accuracy	Class 2
	Class 1 (optional) on request
Operating temperature from	-5 to + 55 ºC
Energy indicator	Flashing LED
	16 pulse per kwh
Case material	ABS, UL94 V0
Dimensions	(6 modules) 105 mm
Connection	Pluggable terminals
Max. wire diameter	2,5 mm^2
Mounting	35 mm DIN rail

AUXILIARY VOLTAGE

Self supplied

DOUBLE TARIFF (TCI6i-DT)(*)

The equipment has two local meters to add energy from the information received from a contact.
Closed contact, adds kWh in meter I.
Open contact, adds kWh in meter II.
(*) Option: select by input voltage

CONNECTION DIAGRAMS

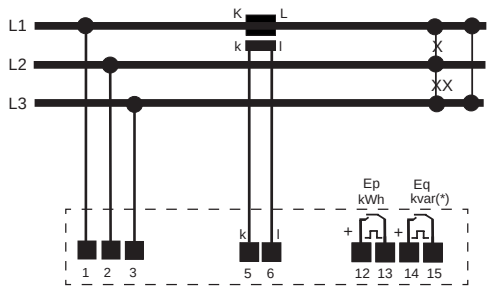

TCI6i-I / TCIV6i-I - Balanced three-phase, 3 wire
(*) TCIV6i-I model only

16 position switch

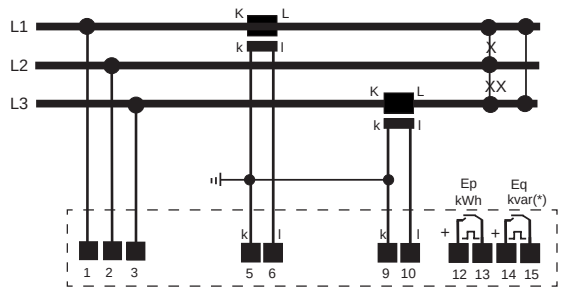

TCI6i-II / TCIV6i-II - Unbalanced three-phase, 3 wire
(*) TCIV6i-II model only

16 position switch

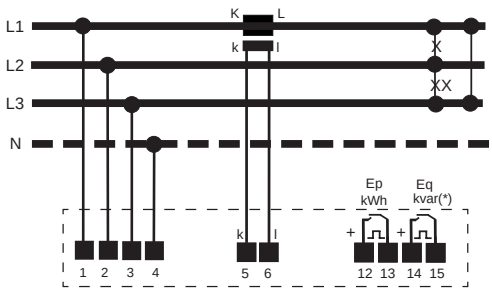

TCI6i-I / TCIV6i-I - Balanced three-phase, 4 wire
(*) TCIV6i-I model only

16 position switch

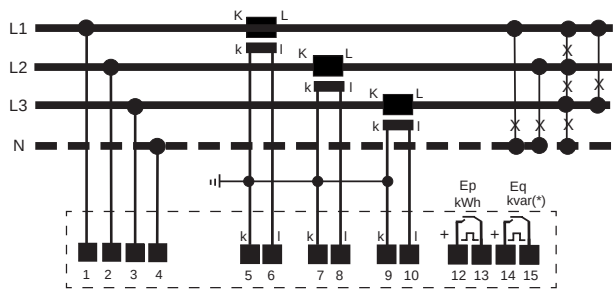

TCI6i-3 / TCIV6i-3 - Unbalanced three-phase, 4 wire
(*) TCIV6i-3 model only

16 position switch

THREE-PHASE - CT OPERATED - TCI6-3 - TCIV6-3

- **Unbalanced three-phase**
- **Active energy or Active energy + Reactive energy**
- **Cl. 2 Accuracy (EN 62053)**
- **Selectable primary current**
- **6 digits electromechanical counter**
- **Pulse output (Optocoupler): SO (DIN 43864)**
- **6 DIN modules**

ACTIVE ENERGY	MODEL
Three-phase, unbalanced, 4 wire	TCI6-3
ACTIVE ENERGY+REACTIVE ENERGY	**MODEL**
Three-phase, unbalanced, 4 wire	TCIV6-3

TECHNICAL SPECIFICATIONS

VOLTAGE INPUT

Rated voltage (Un)	110, 230 or 400 V A.C.
Burden	< 2,8 VA (L1-L3)
	< 1mA x Un (on measuring)
Operating range	80-120 % Un
Frequency	50 and 60 Hz

CURRENT INPUT

Current IB (IMAX)	X/1 or X/5 A
Burden	< 0,2 VA
Operating range	0-120 % IB
Starting current (In)	1 % IB

VERSIONS

- TYPE 1.
- Primary current: 5, 10, 25, 50, 75, 100, 125, 150, 200, 250, 300, 400, 500, 600, 800 or 1000 A.

- TYPE 2.
- Primary current: 300, 400, 500, 600, 750, 800, 1000, 1200, 1250, 1500, 1600, 2000, 2500, 3000, 4000 or 5000 A.

PULSE OUTPUT (OPTOCOUPLER)

Number of outputs	TCI...	1
	TCIV...	2
Pulse weight	Version 1	1 pulse / kWh
	Version 2	1 pulse / 10 kWh
Type		SO (DIN 43864)
		with external power supply
		by optocoupler
Insulation		4 kV, 1 min.
Maximum current		50 mA
Voltage		5 - 48 V D.C.
Pulse length		> 100 ms
		Optional: > 300 ms

RELAY PULSE OUTPUT (OPTIONAL)

Number of outputs	TCI-	1
	TCIV-	2
Pulse weight	Version 1	1 pulse / kWh
	Version 2	1 pulse/ 10kWh
TYPE		Relay contacts
		250 V, 3 A,100 VA
Insulation		2 kV, 1 min.
Pulse length		> 100 ms
		Optional: > 300 ms

GENERAL FEATURES

Accuracy	Class 2
	Class 1 (optional) on request
Operating temperature from	-5 to + 55 ºC
Energy indicator	Flashing LED
	16 pulse per kwh
Case material	ABS, UL94 V0
Dimensions	(6 modules) 105 mm
Connection	Pluggable terminals
Max. wire diameter	2,5 mm^2
Mounting	35 mm DIN rail

AUXILIARY VOLTAGE

Aux. v.	110 or 230 V A.C.
Burden	2,8 VA
Operating range	80-120 % Un

CONNECTION DIAGRAMS

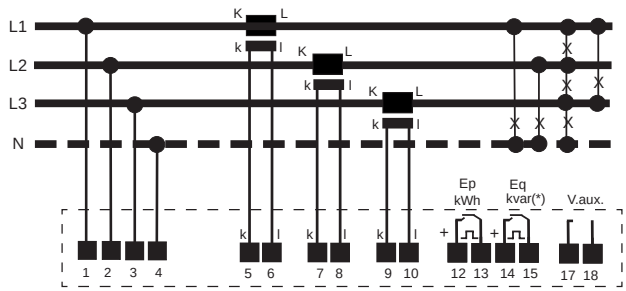

TCI6-3 / TCIV6-3 - Unbalanced three-phase, 4 wire
(*) TCIV6-3 model only

16 position switch

SINGLE-PHASE or THREE-PHASE - DIRECT INPUT - TD96

- **Single-phase or Unbalanced three-phase**
- **Active energy**
- **Cl. 2 Accuracy (EN 62053)**
- **Insulated current (internal transformers)**
- **Energy consumption LED**
- **7 digits electromechanical counter**
- **Pulse output (Relay): SO (DIN 43864)**
- **96 x 96 DIN dimensions**

ACTIVE ENERGY	MODEL
Single-phase	TD96
Three-phase, unbalanced, 3 wire	TD96-II
Three-phase, unbalanced, 4 wire	TD96-3

TECHNICAL SPECIFICATIONS

VOLTAGE INPUT

Rated voltage (Un)	110, 230 or 400 V A.C.
Burden	< 1 mA x Un (L1-L3)
Operating range	80-120 % Un
Frequency	50 or 60 Hz

CURRENT INPUT

Current IB (IMAX)	10 (30) A
Burden	< 0,5 VA
Operating range	0-100 % IMAX
Starting current (In)	0,4 % IB

PULSE OUTPUT (RELAY)

Number of outputs	1
Pulse weight	10 Imp. / kWh
Type	Relay contacts SO (DIN 43864) with external power supply 250 V, 3 A (24 V D.C., 3 A D.C.)
Insulation	2 kV, 1 min.
Pulse length	> 100 ms

DIMENSIONS

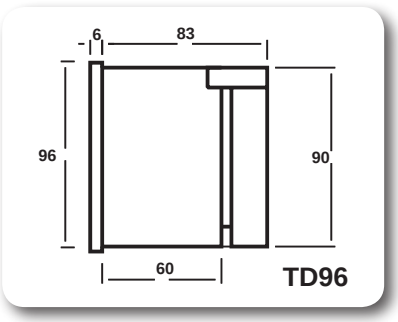

GENERAL FEATURES

Accuracy	Class 1 Class 1 (optional) on request
Temperatura de funcionamiento:	-5 to + 55 ºC
Energy indicator	Flashing LED 16 pulse per kwh
Case material	Metal+ABS, UL94 V0
Dimensions	DIN 96 x 96 mm
Connection	Current inputs M4
Others	Pluggable terminals Max. wire diameter 2,5 mm^2

AUXILIARY VOLTAGE

Self supplied

CONNECTION DIAGRAMS

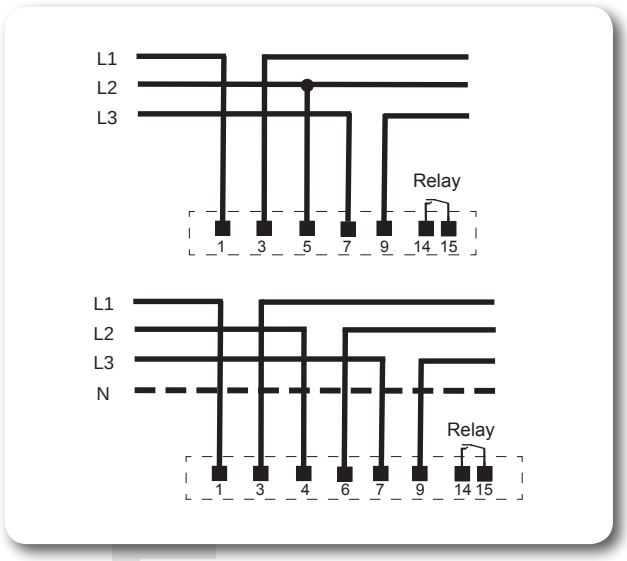

THREE-PHASE - CT OPERATED - TI96 - TIV96

- **Unbalanced three-phase**
- **Active energy or Active energy + Reactive energy**
- **Cl. 2 Accuracy (EN 62053)**
- **Selectable primary current**
- **Insulated current (internal transformers)**
- **Energy consumption LED**
- **7 digits electromechanical counter**
- **Pulse output (Relay): SO (DIN 43864)**
- **96 x 96 DIN dimensions**

ACTIVE ENERGY	MODEL
Three-phase, unbalanced, 3 wire	TI96-II
Three-phase, unbalanced, 4 wire	TI96-III
ACTIVE ENERGY+REACTIVE ENERGY	**MODEL**
Three-phase, unbalanced, 3 wire	TIV96-II
Three-phase, unbalanced, 4 wire	TIV96-III

TECHNICAL SPECIFICATIONS

VOLTAGE INPUT

Rated voltage (Un)	110, 230 or 400 V A.C.
Burden	< 1 mA x Ufase N
Operating range	20-120 % Un
Frequency	50 and 60 Hz

CURRENT INPUT

Current IB (IMAX)	X/1 or X/5 A
Burden	< 0,2 VA
Operating range	0-100 % IMAX
Starting current (In)	1 % IB

VERSIONS

- TYPE 1
- Primary current: 5, 10, 25, 50, 75, 100, 125, 150, 200, 250, 300, 400, 500, 600, 800 or 1000 A.

- TYPE 2
- Primary current: 300, 400, 500, 600, 750, 800, 1000, 1200, 1250, 1500, 1600, 2000, 2500, 3000, 4000 or 5000 A.

PULSE OUTPUT (RELAY)

Number of outputs	TI	1
	TIV	2
Pulse weight	TYPE 1	1 Imp. / kWh
	TIPo 2	1 Imp. / 10kWh
Type		Relay contacts SO (DIN 43864) with external power supply 250 V, 3 A (24 V DC, 3 A DC)
Insulation		2 kV, 1 min.
Pulse length		> 100 ms Optional: > 300 ms

GENERAL FEATURES

Accuracy	Class 2 Class 1 (optional) on request
Operating temperature from	-5 to + 55 ºC
Energy indicator	Flashing LED 16 pulse per kwh
Case material	Metal+ABS, UL94 V0
Dimensions	DIN 96 x 96 mm
Connection	Current inputs M4
Others	Pluggable terminals Max. wire diameter 2,5 mm²

AUXILIARY VOLTAGE

Aux. v.	110, 230 or 400 V A.C.
Burden	2,8 VA
Operating range	80-120 % Un

DIMENSIONS

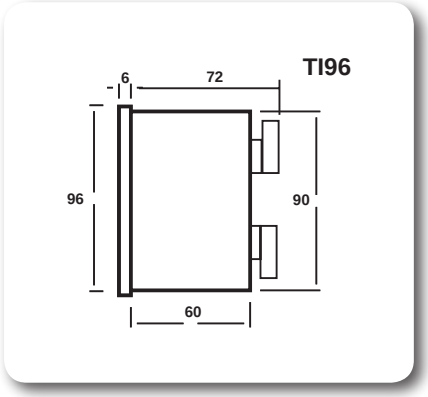

CONNECTION DIAGRAMS

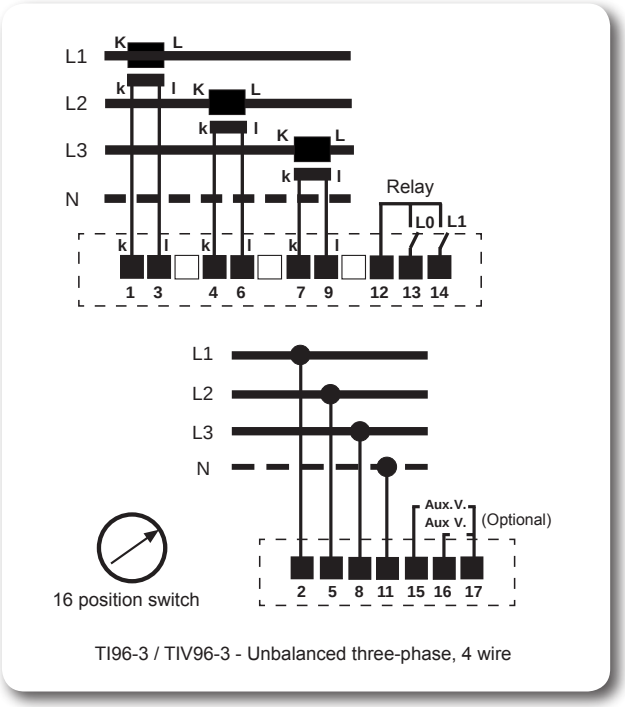

TI96-3 / TIV96-3 - Unbalanced three-phase, 4 wire

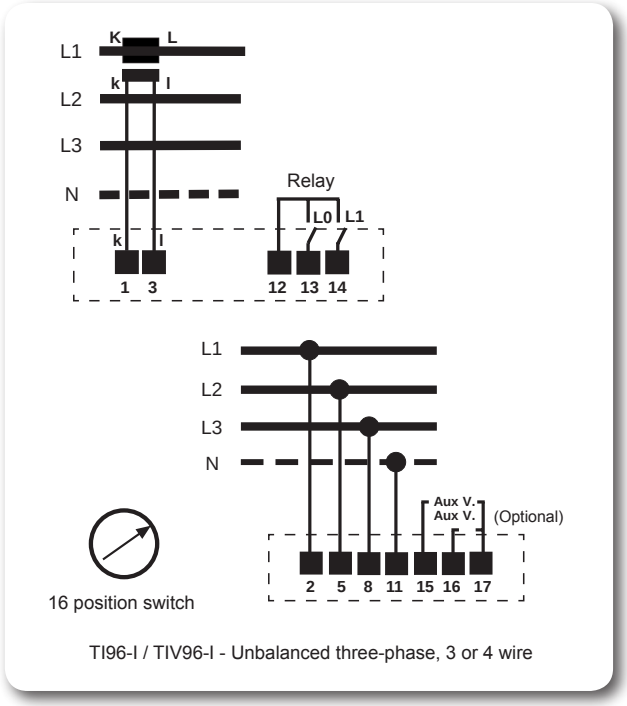

TI96-I / TIV96-I - Unbalanced three-phase, 3 or 4 wire

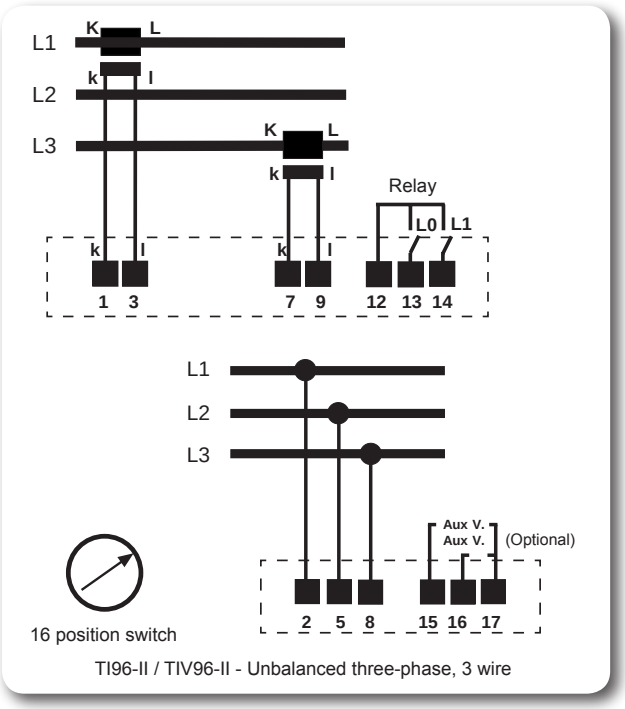

TI96-II / TIV96-II - Unbalanced three-phase, 3 wire

TOTALIZER MODULE TTI - TTIM

TTI: Totalizer module with microprocessor and serial output.
TTIM: Totalizer module with microprocessor and serial output, 128 kB memory, LCD display and built-in keypad.

- **8 independent pulse counters.**
- **Independent counter reset.**
- **Programmable counter value.**
- **TTIM: 90 days of load curve per counter.**
- **RS485 serial output.**
- **Programmable (capable to mesure closed contact time in seconds, time or pulses).**

MODEL

- TTI	Basic model
- TTIM	Basic model 128 kB Circular memory LCD display 90 days of load curve

TECHNICAL SPECIFICATIONS

INPUT

Number of inputs	8
Type	SO DIN 43864, Transistor output pulse, voltage free contacts
Pulse length	>100 ms
Time between pulses	>100 ms
Max. Voltage	12 V
Max. Current	10 mA
Insulation by optocoupler	2,5 kV, 1 min

SALIDA SERIE

Number of outputs	1
Type	RS485
Connection	2 wire or 4 wire
Baud rate (standard)	9600 bauds
Communication protocol	MODBUS
Max. number of devices per line	32
Max. length of system per line (without amplifier)	1250 m

AUXILIARY VOLTAGE

Aux. v.	100, 110, 230 o 400 V A.C.
Burden	4 VA
Operating range	80-120 % Un

GENERAL FEATURES

Case material	ABS, UL94 V0
Dimensions	(9 modules) 155 x 90 mm
Terminales	Pluggable
Max. wire diameter	2,5 mm²
Weight	0,40 kg
Operating temperature from	-5 to +55 ºC
Electrical safety (EN 61010)	Class 2 Category III

ACCESORIOS

RS232 / RS485 converters
RS485 amplifiers

CONNECTION DIAGRAM

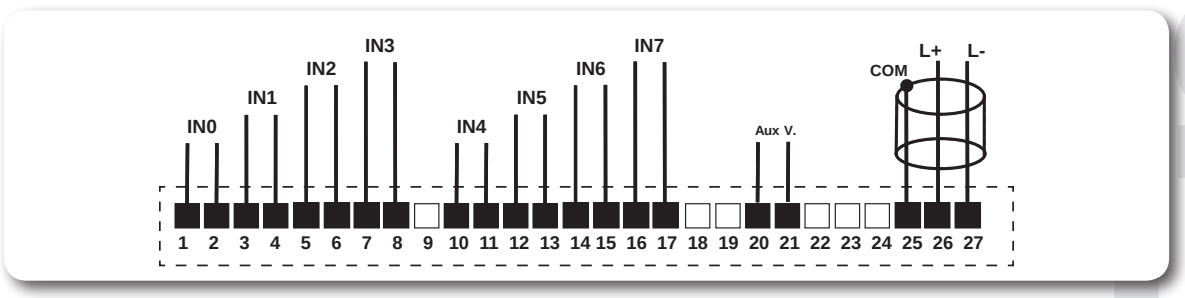

SOFTWARE - TTIgest

SACI has developed the TTIgest, to optimize and check water, gas, electricity, consumption etc., in applications such as hotels, harbours, rented offices, etc. The system is compatible with our 'TTI - TTIM' totalizers and 'MAR' power analyzers.

It is designed to manage power consumption by these meters and to issue the corresponding bills. It is not an accounting or billing system. It is a program which checks meters and issues bills.

First all required data is defined to issue these bills. Then the physical elements comprising the instrument network are configured, such as the meters and totalizers.

Its operation is very simple. An 'Input customer' button associates the required meters to customer use. They take the meter's values and store them. Another button, 'Customer Output' reads the associated meters again, calculates power consumption and issues a bill with the relevant charges. The self billing option may be chosen for each time period.

The totalizers with memory (TTIM) can create load curves, examining the data numerically or as a graph as well as printing and exporting it.

The new version includes all unchecked consumption histories for all meters (using header meters) plus the assigned and non assigned checked consumption.

Innovations include the prepaid checking, allowing each meter's balance to be checked or allowing collective or individual contributions to be made. It also checks the free consumption limit and the minimum amount to be invoiced.

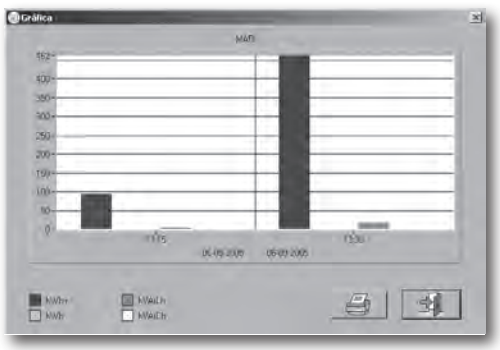

The TTIgest program must be installed on a PC with the following minimum requirements:

CPU: Pentium 200 MMX
RAM: 64 Mb
Screen: VGA with 1Mb
Monitor: Colour, 14''
Software: Windows 98, Me, NT4, 2000 or Xp
DOES NOT OPERATE WITH WIN95

It must also have a serial port for the RS-232 - RS485 (IFRxx) converter connection and a series port for the mouse. It must also have a parallel port for connecting the anti-copying device and a printer.
Microsoft Internet Explorer 4.x or above must be installed.

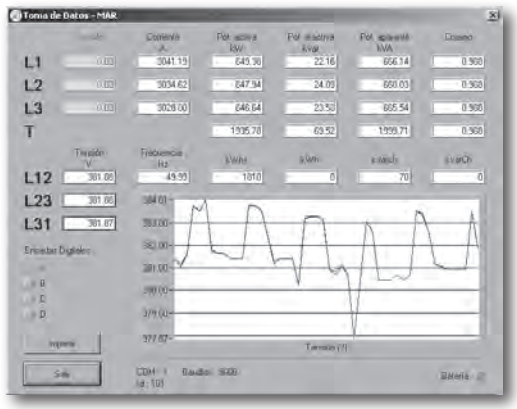

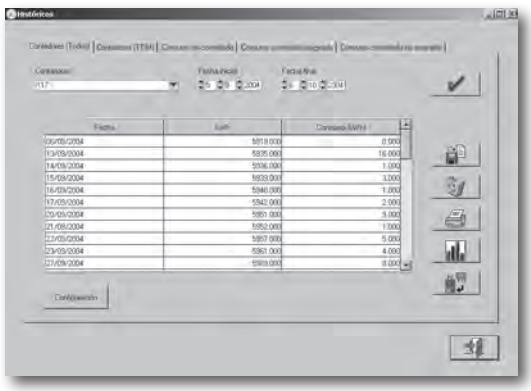

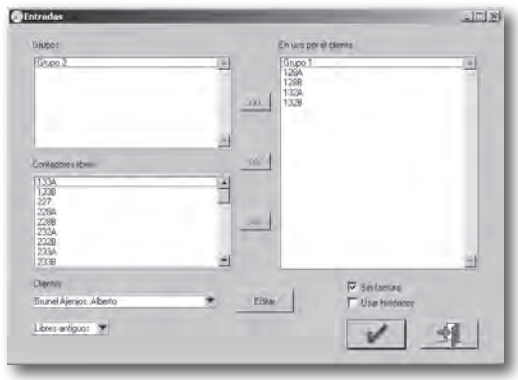

STARTING-UP

Start-up consists in identifying all the physical elements comprising the instrument system and the necessary data for issuing bills.

- **Definition:** Necessary elements are as follows:
- **Currency:** The currency appearing on the bills is defined.
- **VAT Types:** Different types of VAT may be defined.
- **Tariffs:** Also different tariffs may be set.
- **Daily costs:** Daily fixed contract costs may be associated to preset meters.
- **Free consumption:** Free consumption limits may be assigned to meters.
- **Bill:** All components on the bill are defined, including the automatic billing option.
- **Customer:** Option for accessing the customer data base.
- **Password:** To protect the operations to be carried out.
- **Setting:** Representing the physical elements comprising the system.
- **Modems:** Modem communication may be established.
- **Totalizers:** Identifies the totalizers (TTI or TTIM) on the system.
- **Meters:** All existing meters with their VAT identification, tariff, daily cost, free consumption, units, factor, etc. Header meters are also defined.
- **Groups:** Option for associating several meters in one group to manage them as one single element.
- **Reports:** To check the system's default settings, communications and bills.

Customer Entry

That is to say, when a customer enters to use the installation, he only has to be started as a customer, if not one already, and then he is shown which meter system or group to which he is to be assigned. Once this is done, the system reads the meters and stores the values. An innovation allows the use of histories to be used for inputs and the option for not issuing bills.

Customer Departure

When a customer leaves the installation, the elements associated with that customer are selected and the meters are read. Consumption is calculated and the bill issued. Histories may also be used on departure. Customer departure may be previously set so that it is automatically carried out.

Bills

Allows the bills which are to be issued to be checked, deleted and printed. It is also possible to add independent items to a customer as required.
Stored bills may be displayed, cancelled, deleted and printed. Automatic manual billing is allowed.

Errors

The system detects all communication errors and manages them, allowing it to act as a system administrator.

Histories

This allows load data curves for meters connected to a totalizer with memory to be examined. Data may be printed and exported and a load curve graph displayed between the two selected dates.

This new version includes a load curve for all meters, uncontrolled consumption recordings and assigned and non assigned controlled consumption recordings.

Prepayment

Main innovation in this version. Manages the prepayment checking for customers and informs them to the balance on each in real time. It allows collective or individual payment including setting prepayment tariffs.

Header

SACI MAR - 3 instruments may located at the connection of the electrical installation to display all electrical parameters in the system and, using the software, save and show as a graph energy histories for 15 minute periods, by hours and by days. It also displays instant values.

Tools

The language may be defined, the data base compressed, preset or manual copies made, old data deleted, ...

MULTIFUNCTION RECORDING METERS FOR TYPE 3 AND 4 CUSTOMERS

CTMRII – FUNCTIONAL DESCRIPTION

CTMRII are static meters for 3-phase connection. They measure active and reactive energy with classes 1 and 2 respectively. Moreover, these meters include built-in recording functions for type 3 and 4 customers.
They have a four line, twenty character display for data displaying, two buttons, one for bill closures and another for display management, LED diodes for checking active and reactive energy measurement, signal outputs using relays and pulse emission by solid state relays. They also have three communication interfaces, a UNE EN 62056-21 optical one, a RS232 electrical one and a RS232 or RS485 one. Communication protocol is UNE EN 61870-5-102, which can be adapted by the System Operator.

AVAILABLE INFORMATION

Additionally, the counter has the following information:

- Phase voltage and line voltage
- Currents
- Active, reactive and apparent power, global and per phase phi cos
- Frequency
- Information about software updates
- Information about special actions (reset to zero, transformation ratio, and burden curve periods.
- Backup of the main values.

CONFIGURABLE PARAMETERS

Global:

- Date and time
- Automatic or scheduled season change
- Date of winter/summer change
- Minimum time between bill closures
- Transformation ratio
- Setting of communication ports and modem setting
- Description of measurement point (twenty character string)
- Programming identification (twenty five character string)
- Recording and measurement point address
- General access and only read password
- Outputs' setting
- Turn on/off the closing button
- Private password for electronic sign

For each active or latent contract:
Latent contract is understood to mean one which will start operating on a preset date.

- Seasons: it defines the seasons into which the year is divided, the different types of days and time slots for those days.
- Activation date of the latent contact
- Table of holidays
- Table of special days
- Contracted powers in each billing period
- Day of automatic billing closure –if applicable-
- Preset bill closures (a date and time for a closure is set)

TECHNICAL CHARACTERISTICS

ELECTRICAL REFERENCE VALUES

Reference voltage Un:

Depending on connection:	
Indirect	**3x63,5/110V**
Semi-Indirect	**3x230/400V**
Direct	**3x230/400V**

Reference current In (Imax):

Depending on connection:	
Indirect	**0,05-5 (10) A**
Semi- Indirect	**0,05-5 (10) A**
Direct	**0,5-10 (80) A**

Reference frequency:	50 Hz.

Over currents:

Depending on connection:	
Indirect	20 Imax.0,5 s.
Semi-Indirect	20 Imax.0,5 s.
Direct	30 Imax half cycle

Over voltages	2 Un 10s.

ACCURACY

Accuracy class: B for active energy and 2 for reactive energy

Starting current on active:
Depending on connection:

Indirect	10 mA
Semi- Indirect	10 mA
Direct	40 mA

Clock accuracy: 0,5 s/día entre 20 and 26 ºC

Variation of clock accuracy with temperature: <0,1s/ºC/24h.

Check constant:

CTMRII (Indirect)	20000 Imp/kWh, 20000 Imp/kvarh
CTMRII (Semi-Indirect)	5000 Imp/kWh, 5000 Imp/kvarh
CTMRII (Direct)	500 Imp/kWh, 500 Imp/kvarh

CASING

Dimensions: acording to DIN 43857

Weight: Indirect, Semi-Indirect 1,9 Kg. Direct 2,4 Kg

Mounting triangle: 230 mm between upper and lower points and 150 between lower points.

Terminal box: Interchangeable

Protection class: II

Mechanical strength: 0,22 0,05Nm.

Shock: 30gn, 18ms.

Vibration: f<60Hz, 0,075mm. f>60Hz, 1g

Resistance to heat and fire: 960 ± 15 on terminal box, 650 ± 10 on terminal cover and casing for 301s.

Protection against water and dust penetration.: IP 51.

Dry heat: 70±2ºC, 72h.

Cold: -25±3ºC, 72h.

Humid heat: Según IEC 68-2-30, variante 1.

CLIMATE CONDITIONS

Temperature range:

Operation:	de -10 ºC a 55 ºC.
Operating limit :	de -20 ºC a 60 ºC.
Storage and transport:	de -25 ºC a 70 ºC.

ELECTRICAL REQUIREMENTS

Burden

Voltage circuits:	<2W and 3VA
Current circuits:	<3x1VA
Un range:	
Operation	de 0,9 a 1,1 Un.
Operation limit	0 a 1,15 Un.

Insulation:

Alternating voltage:	4kV, 50 Hz. 1 minuto.
Pulse voltage:	6kV.1,2/5s

ELECTROMAGNETIC COMPATIBILITY

Electrostatic discharges:
Severity level: 4, 10 discharges of 8kV.

Immunity to HF electromagnetic fields: 10 V/m from 80 to 1000MHz. Severity level 3.

Insulation against rapid transient bursts: 2 kV and 4 kV.

Radio-interference measurement:between 0,15 and 300 MHz.
4, 10 discharges of 8 KV.

Immunity to HF electromagnetic fields: 10 V/m from 80 to 1000MHz. Severity level 3.

Insulation against rapid transient bursts: 2 kV and 4 kV.

Radio-interferences measurement: between 0,15 and 300 MHz.

GENERAL FEATURES

Display: 4x20 LCD alphanumeric characters

Communication:

Protocol:	published by System Operator
Optical:	According to UNE EN 61107, programmable baud rate up to 9600 bauds, parity programmable
Local port:	RS232 direct or via modem, programmable, speed up to 115200 bauds, parity programmable.

Operating reserve: 10 years.

Buttons: 1 sealable for manual reset to zero
1 for display management.

Battery: polarized housing for easy change over

CONNECTION DIAGRAM

CTMRII - SEMI-INDIRECT
Three-phase, 4 wire, low voltage

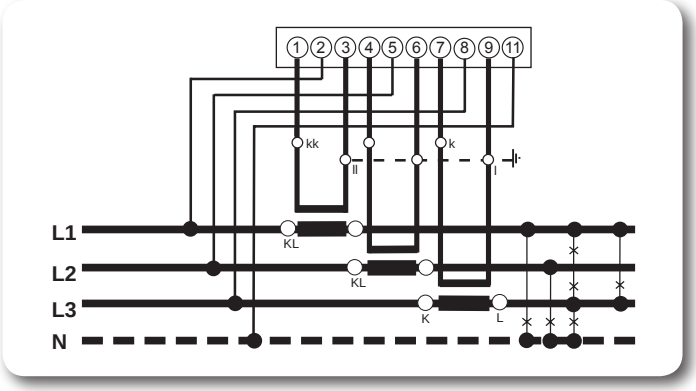

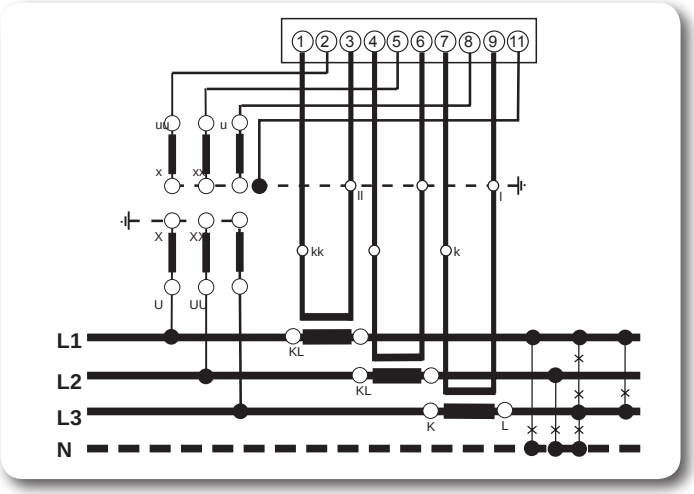

CONNECTION DIAGRAM

CTMRII - INDIRECT
Three-phase, 4 wire, mid voltage

CONNECTION DIAGRAM

CTMRII - INDIRECT
Three-phase, 3 wire, mid voltage

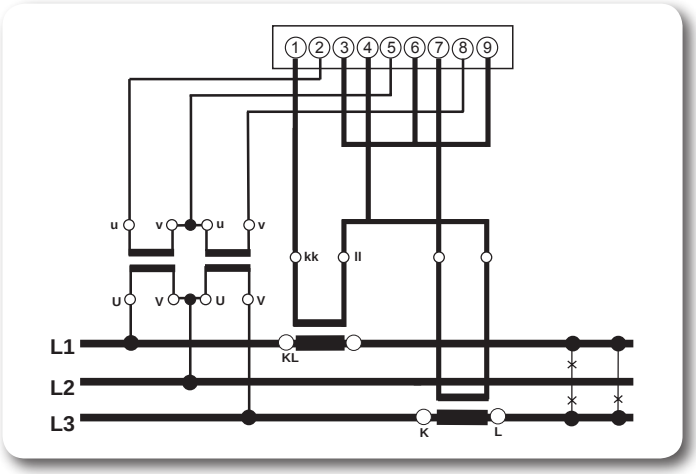

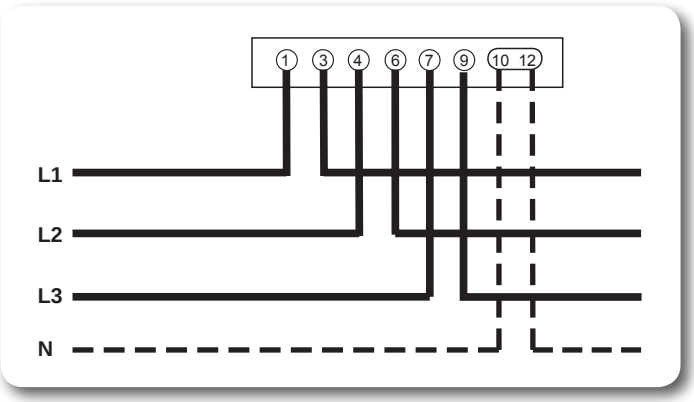

CONNECTION DIAGRAM

CTMRII - DIRECT
Three-phase, 4 wire, low voltage

DIMENSIONS

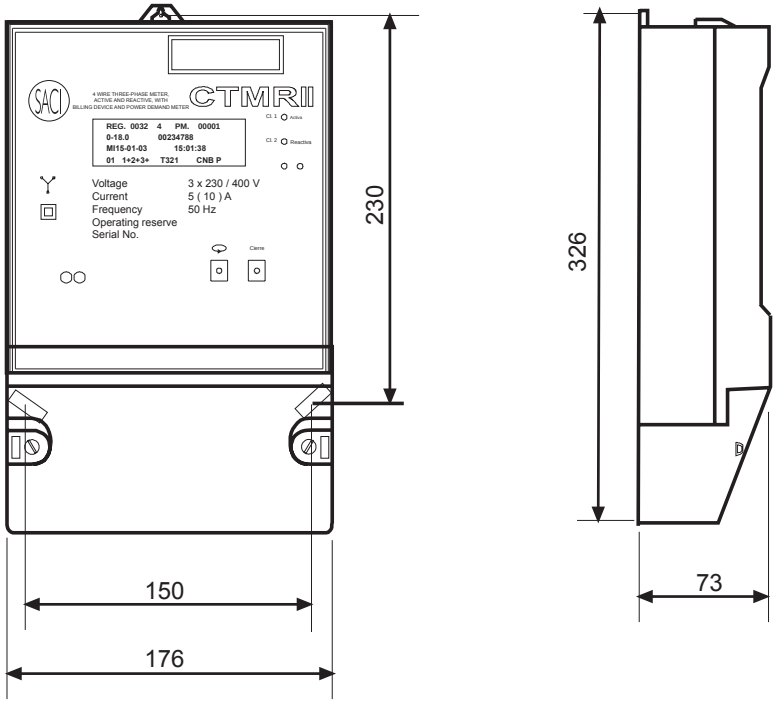
SACI
4 WIRE THREE-PHASE METER,
ACTIVE AND REACTIVE, WITH
BILLING DEVICE AND POWER DEMAND METER
CTMRII
REG. 0032 4 PM. 00001
0-18.0 00234788
MI15-01-03 15:01:38
01 1+2+3+ T321 CNB P
Cl. 1 Active
Cl. 2 Reactive
Voltage 3 x 230 / 400 V
Current 5 (10) A
Frequency 50 Hz
Operating reserve
Serial No.
Clame
230
326
150
176
73